Annex 2
Application of Vulnerability Analysis: Case study of Limón, Costa Rica

Introduction

The case study carried out in Costa Rica[22], along with three conducted in Brazil, Venezuela and Montserrat, for floods, landslides, hurricanes, and volcanic eruptions, served to validate the use of the methodology presented in this document by water authorities in carrying out vulnerability studies for the most common natural hazards.

Case Study of Limón, Costa Rica

The vulnerability analysis, conducted in 1996, was a retrospective study of the drinking water and sewerage system in Limón, Costa Rica.[1] The technical data corresponded to a study carried out in 1991, prior to the April 1991 earthquake that seriously impacted the area. The study concludes that had mitigation measures been applied to the water system in Limón, there would have been a savings of some US$4 million in repairs to the system following the 1991 event, and much of the impact on thousands of people would have been lessened.

While the case study evaluated the entire water system in the area, for the purpose of using the vulnerability matrixes, analysis of the Banano River system, which supplies drinking water to the city of Limón, and the sewerage system are presented here.

Limón is the largest city in Limón Province, and is located 160 km from San José, the Costa Rican capital. In 1991, some 55,000 persons were served by the city's aqueduct, accounting for 10,764 domestic connections. Nearly 100% of the population had piped drinking water, while only 20% were connected to the sewerage system.

In 1991, there were three sources for Limón's drinking water supply, with a maximum installed capacity of 500 l/s, and average production of 391 l/s. The water system can be divided into three subsystems: Banano River (which produced 71% of Limón's supply), Moín (produced 21%), and the La Bomba wells (produced 8%).

Following are some of the most important characteristics of the Banano River subsystem (see Figure A1) which are used in the vulnerability matrixes:

- Water intake: Water was taken from the Banano River subsystem using a pumping station (three electrical pumps) located on the river, with a capacity of from 120 l/s to 350 l/s.

[22] This analysis was compiled from a case study carried out by Saúl Trejos on the drinking water and sewerage system in the city of Limón, Costa Rica (PAHO/WHO, *Estudio de caso: Terremoto del 22 de abril de 1991, Limón, Costa Rica;* 1996). Differences between the case study and the material presented in this annex are a result of certain modifications in the way data were compiled and presented in the vulnerability analysis.

Figure A1.
Water Conveyance and Distribution for the Banano River Subsystem

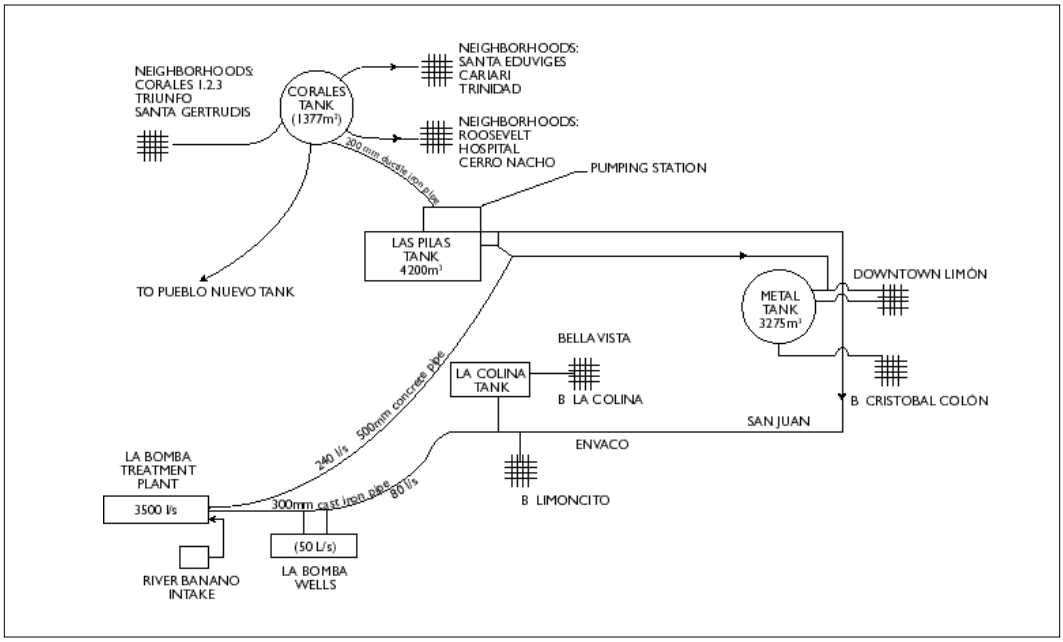

- The conveyance pipeline was made up mainly of 350 mm diameter pipe, installed in 1981, with Tyton type jointss. The pipe is located primarily in alluvial soil and clay.
- Treatment plant: The settling tank consisted of a reinforced concrete tank; in addition there were units for rapid mixing, flocculation, sedimentation, and filtration.

A more detailed description of each of the components of the subsystem, as well as the other Limón subsystems are available in the case study.

Seismic Hazard in the City of Limón

There is a record of numerous seismic events in the Atlantic region of Costa Rica, where Limón is located. Strong earthquakes affected the region of San Fernando de Matina Fort in 1798. The 1822 San Estanislao earthquake, with an estimated magnitude of 7.5, had a strong impact on the Matina region and caused soil liquefaction, a small tsunami on the Atlantic coast, and was felt from Monkey Point to Bocas del Toro in Panama. There are indications that the earthquake of 20 December 1904, while originally attributed to faults in the area of Dulce Gulf, actually occurred in the Caribbean rather than southern Pacific region of the country. On 26 April 1916 there was an earthquake in the Bocas del Toro region; on 7 April 1953 there was an earthquake in Limón with a magnitude of at least 5.5; and the earthquake on 22 April 1991 in the Valley de la Estrella had a magnitude of 7.4. There have also been series of small earthquakes (between 4.0 and 5.0 magnitude) that are believed to have originated in the Atlantic region, but because of the scarcity of population, there are few reports of their having been detected. Accelerometers were not installed in this area until after the 22 April 1991 earthquake.

Seismic risk in Costa Rica is illustrated in Figure A.2. While the city of Limón is located in a zone of relatively low seismic risk, it sustained major damage in the 1991 earthquake.

Figure A2.
Isoaccelerations for a 100-year return period (Costa Rica)

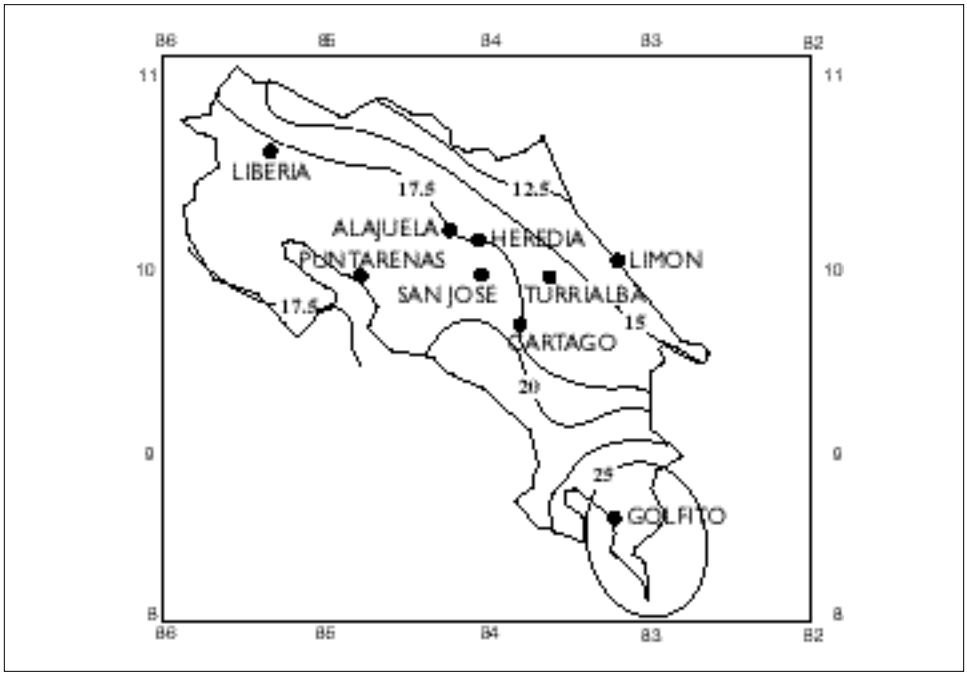

Source: CEPIS, 1996.

Five damage probability matrixes, as described in Chapter 4, are presented here with data pertaining to the case study.

Matrix 1A - Operation Aspects

Name of Drinking Water System: Banano River System (Limón, Costa Rica)

COMPONENT	COMPONENT CAPACITY	CURRENT DEMAND	DEFICIT (-) SURPLUS (+)	REMOTE WARNING SYSTEMS
Basin	38,000 1/s	252 1/s	3,548 1/s	
Banano River intake	350 1/s	252 1/s	98 1/s	
Pipeline	350 1/s	252 1/s	98 1/s	
Treatment Plant	350 1/s	252 1/s	98 1/s	
River Banano wells	51 1/s	51 1/s	01 1/s	
300 mm pipelines	68 1s	83 1s	-15 1s	
500 mm pipelines	240 1/s	218 1/s	22 1/s	
Metal tank	3,275 m^3	1,334 m^3	1,941 m^3	
Colina tank[1]	150 m^3	2,147 m^3	-1,997 m^3	
Intermediate pumping station	4,200 m^3	2,374 m^3	1,826 m^3	
Corales tank	1,377 m^3	2,927 m^3	-650 m^3	
Pieline network	374 1/s	4,53 1/s	-79 1/s	

INTER-INSTITUTIONAL INFORMATION WARNING SYSTEMS
- ☒ Civil Defense
- ❑ Meteorological Institute
- ❑ Volcanology Institute
- ❑ Seismology Institute
- ☒ Other: Red Cross
- ☒ Firefighters
- ☒ ICE
- ☒ Executive power

WATER COMPANY INFORMATION AND WARNING SYSTEMS
- ☒ UHF Radio - 30 KHz network
- ❑ VHF Radio
- ☒ Telephone - not reliable in emergencies
- ❑ Other

INFORMATION SYSTEM FOR USERS
- ☒ Radio
- ☒ Television
- ❑ Printed Brochures
- ☒ Other: Press releases

(1) Only supplies a small sector.

Matrix 1B - Operation Aspects

Name of Sewerage System: Drainage system for the city of Limón, Costa Rica			
COMPONENT[1]	COVERAGE %	CAPACITY	REMOTE WARNING SYSTEMS
Collection networks:			
• Cuenca Central	80	72 1/s	Not present
• Pinta	72	16 1/s	Not present
• Corales	85	18 1/s	Not present
• Cangrejos	45	12 1/s	Not present
• Portete	15	1 1/s	Not present
Pumping station		75 1/s	Not present
Pipeline		75 1/s	Not present

INTER-INSTITUTIONAL INFORMATION AND WARNING SYSTEMS
- ☒ Civil Defense
- ❑ Meteorological Institute
- ❑ Volcanology Institute
- ❑ Seismology Institute
- ☒ Other: Red Cross
- ☒ Firefighters
- ☒ ICE
- ☒ Executive power

WATER COMPANY INFORMATION AND WARNING SYSTEMS
- ☒ UHF Radio - 30 KHz network
- ❑ VHF Radio
- ☒ Telephone - not reliable in emergencies
- ❑ Other

INFORMATION SYSTEM FOR USERS
- ☒ Radio
- ☒ Television
- ❑ Printed Brochures
- ☒ Other: Press releases

(1) Waste water is not treated.

Matrix 2 - Administration and Response

NAME OF SYSTEM: Drainage system for the city of Limón, Costa Rica

TYPE OF SYSTEM: ❑ DRINKING WATER ☒ SEWERAGE

INSTITUTIONAL ORGANIZATION	OPERATION AND MAINTENANCE	ADMINISTRATIVE SUPPORT
A. EMERGENCY RESPONSE PLANS ❑ YES ☒ NO Date of most recent review	A. PLANNING PROGRAMS ☒ YES ❑ NO	A. AVAILABILITY AND MANAGEMENT OF MONEY ☒ YES ❑ NO AMOUNT: Approx. US$2,100.00 (available for both drinking water and sewerage system)
B. MITIGATION PLAN ❑ YES ☒ NO	B. OPERATION PROGRAMS ☒ YES ❑ NO	
C. INTER-INSTITUTIONAL COORDINATION ❑ YES ☒ NO	C. PREVENTIVE MAINTENANCE PROGRAMS ☒ YES ❑ NO	B. LOGISTICAL SUPPORT FOR PERSONNEL (Transport and supplies) ☒ Yes ❑ NO
D. COMMITTEE FOR DRAFTING MITIGATION PLANS ❑ YES ☒ NO	D. TRAINED PERSONNEL ☒ YES ❑ NO	
E. EMERGENCY COMMITTEE ❑ YES ☒ NO (Not completely formed) Members of Committee: Name: Responsibility:	E. AVAILABILITY OF EQUIPMENT AND MACHINERY ☒ YES ❑ NO Type of Machinery and Equipment:	C. CONTRACT WITH PRIVATE COMPANY ❑ YES ☒ NO (Legal flexibility is lacking) Name:
	• For water distribution networks, there is equipment for maintenance under routine conditions	
	• There is a large amount of equipment available for medium-sized emergencies.	
	• Stock is available for maintaining electrical/mechanical equipment	

Matrix 2 - Administration and Response

NAME OF SYSTEM: Acqueduct for the city of Limón, Costa Rica

TYPE OF SYSTEM: ☒ DRINKING WATER ❑ SEWERAGE

INSTITUTIONAL ORGANIZATION	OPERATION AND MAINTENANCE	ADMINISTRATIVE SUPPORT
A. EMERGENCY RESPONSE PLANS ❑ YES ☒ NO Date of most recent review	A. PLANNING PROGRAMS ☒ YES ❑ NO	A. AVAILABILITY AND MANAGEMENT OF MONEY ☒ YES ❑ NO AMOUNT: Approx. US$2,100.00 (available for both drinking water and sewerage system)
B. MITIGATION PLAN ❑ YES ☒ NO	B. OPERATION PROGRAMS ☒ YES ❑ NO	
C. INTER-INSTITUTIONAL COORDINATION ❑ YES ☒ NO	C. PREVENTIVE MAINTENANCE PROGRAMS ☒ YES ❑ NO	B. LOGISTICAL SUPPORT FOR PERSONNEL (Transport and supplies) ☒ Yes ❑ NO
D. COMMITTEE FOR DRAFTING MITIGATION PLANS ❑ YES ☒ NO	D. TRAINED PERSONNEL ☒ YES ❑ NO	
E. EMERGENCY COMMITTEE ❑ YES ☒ NO (Not completely formed) Members of Committee: Name: Responsibility:	E. AVAILABILITY OF EQUIPMENT AND MACHINERY ☒ YES ❑ NO Type of Machinery and Equipment:	C. CONTRACT WITH PRIVATE COMPANY ❑ YES ☒ NO (Legal flexibility is lacking) Name:
	• For water distribution networks, there is equipment for maintenance under routine conditions	
	• There is a large amount of equipment available for medium-sized emergencies.	
	• Stock is available for maintaining electrical/mechanical equipment	

Matrix 3 - Physical Aspects and Impact on the Service

NAME OF SYSTEM: Aqueduct for the city of Limón, Costa Rica (subsystem of Banano River)

TYPE OF SYSTEM: ☒ DRINKING WATER ❑ SEWERAGE

TYPE OF HAZARD: Seismic PRIORITY(1): ☒ 1 ❑ 2 ❑ 3

AREA OF IMPACT: Limón Province, Costa Rica

EXPOSED COMPONENTS	CONDITION OF COMPONENT	ESTIMATED DAMAGES SERVICE(2)	REHABILITATION TIME 100 (days)	IMMEDIATE REMAINING CAPACITY		IMPACT ON SERVICE(2) (Joints)
				[ ]	%	
Basin	n/a	Increase in turbidity to 600 UNT	365	0	0	7,148
Banano River intake	Vulnerable to breakdowns	Control panels toppled	4	0	0	7,148
Pipeline	Rigid joints	Not expected	0	350 1/s	100	0
Treatment plant	Good condition	Wall failure	60	0	0	7,148
La Bomba wells	Good condition	Interruption in electrical supply	4	0	0	1140
300 mm distribution pipes	In critical condition because of age	54 failures in joints	19	0	0	2,280
500 mm distibution pipes	Pipe material is fragile	144 failures in joints	56	0	0	6,008
Metal tank	Good condition	Not expected	0	3,275m^3	100	0
Colina tank	Average condition	Cracking in walls	6	0	0	3,683
Intermediate pumping station	Acceptable	Cracks in foundation	10	0	0	0
Corales tank	Good condition	Not expected	0	1,377m^3	100	0

(1) Priority 1(High): More than 50% of components affected and/or the intakes and conveyance capacity.
Priority 2 (Medium): Between 25 and 50% of components affected, without affecting the intakes and conveyance.
Priority 3 (Low): Less than 25% of components affected, without affecting the intake and conveyance.

(2) Number of joints affected in terms of quality, quantity, and/or continuity of service.

Matrix 3 - Physical Impact on the Service

NAME OF SYSTEM: Drainage network for the city of Limón, Costa Rica

TYPE OF SYSTEM: ❑ DRINKING WATER ☒ SEWERAGE

TYPE OF HAZARD: Seismic PRIORITY(1): ☒ 1 ❑ 2 ❑ 3

AREA OF IMPACT: Limón Province, Costa Rica

EXPOSED COMPONENTS	CONDITION OF COMPONENT	ESTIMATED DAMAGES SERVICE(2)	REHABILITATION TIME 100 (days)	IMMEDIATE REMAINING CAPACITY		IMPACT ON SERVICE(2) (Joints)
				[ ]	%	
Collectors: Cuenca Central	Good	17 breaks; 22 sites of damage	21	58 l/s	80	270
Pinta	Good	4 breaks; 5 sites of damage	6	13.5 l/s	85	45
Corales	Good	4 breaks; 1 site of damage	6	15.8 l/s	89	37
Cangrejos	Good	3 breaks; 4 sites of damage	5	9.4 l/s	80	44
Portete	Average	1 site of damage	2	0.6 l/s	75	4
Pumping station	Average	Interruption in electrical supply	4	0	0	1,183
Pipeline	Good	Not expected	0	75 l/s	100	0

(1) Priority 1 (High): More than 50% of components affected and/or the intakes and conveyance capacity.
Priority 2 (Medium): Between 25 and 50% of components affected, without affecting intakes and conveyance system.
Priority 3 (Low): Less than 25% of components affected, without affecting the intakes and conveyance system.

(2) Number of connections affected in terms of quality, quantity, and/or continuity of service.

Matrix 4A - Mitigation and Emergency Measures (Administration and Operation)

Name of system: Aqueduct of the city of Limón, Costa Rica ☒ Drinking Water ❑ Sewerage

AREA	MITIGATION MEASURES		EMERGENCY MEASURES	
		COST US$		COST US$
A) Institutional Organization	• Development of emergency preparedness and response program as outlined by PAHO/WHO - Insitutionalization and organization of the program - Carry out vulnerability analysis (Level 1) - Develop mitigation plan - Develop emergency response plan - Training and dissemination of plan • Within the program: - Produce directives for development of emergency plans - Create emergency response committee - Establish national committee for drafting mitigation and emergency plans - Create regional emergency center - Formalize inter-institutional coordination agreements	20,000.00 25,000.00 27,450.00	- Follow known emergency procedures; - Improvise Emergency Operations Center for operation and maintenance procedures; - Through regional emergency committees, coordinate with other institutions and make first contacts and integration with regional headquarters.	5,000.00 5,000.00
B) Operation and Maintenance	• Complete the radial network (AyA-Limón) • Compile and document operation and maintenance programs • Obtain information on repair of TCCR pipes from manufacturer • Develop lists of key personnel in the company and from other institutions	100,840.00 (Global)	- Carry out damage assessment - Request headquarters to move operation and maintenance staff with experience in emergency management from unaffected zones to the disaster area; - Prioritize repair of damage; - Schedule and oversee rehabilitation work;	15,000.00 (Global)

	• Provide specifications for materials and accessories listed in column 2b. • Provide specifications for equipment listed in column 2b, as well as the following items to be maintained at the local level: 2 compressors, 1 backhoe, 1 electrical plant, 2 sump pumps, equipment for clearing obstructions from sewerage system.		- Contract local personnel and machinery; - Request headquarters to provide equipment and materials from other areas (vehicles, radios, drainage pumps, backhoes, equipment to replace breaks, etc.) - Set water rationing and distribution schedule - Maintain a registry of actions carried out - Immediately transfer funds to the affected zone and increase petty cash amounts in the zone, as well as in the purchase and transport sections - Provide instructions on a 24-hour, 7-day per week basis for immediate response to needs of affected area (cash, personnel, materials and equipment)	5,000.00 (Global)
C) Administrative Support	• Establish standards and regulations to ensure that financial resources are available for emergencies and that the procedures for accessing emergency funds are flexible • Establish procedures to facilitate the transfer of personnel from areas not affected to the disaster area; ensure that procedures for contracting local personnel are flexible • Create mechanisms for transferring current lists of available stock, repair materials, and equipment and vehicles to regional divisions • Develop through the procurement department, a list of private construction companies with available equipment	25,000.00 (Global)		
D) Operational Aspects	• Brace control panels • Install diesel generator (250 hp) • Establish AyA-ICE agreement for priority electrical supply • Construct pre-treatment system • Brace chlorine cylinders	100 75,000.00 300,000.00 100	- Repair control panels - Install provisional generator (leased) - Repair wooden substructure and substitute screens with materials available locally (e.g., wood) - See measures for the Banano River intake, listed above	3,600.00 20,000.00 3,600.00

	• Replace wood and asbestos cement screen, substructure for flocculators and settling basins with less fragile material (aluminum, fiberglass, plastic, etc.) • Install two diesel generators (100 and 30 hp)	200,000 40,000		
TOTAL		**198,290.00**		

Matrix 4B - Mitigation and Emergency Measures (Physical Aspects)

Name of System: Acqueduct of the city of Limón, Costa Rica ☒ Drinking Water ❑ Sewerage

COMPONENT	MITIGATION		EMERGENCY	
		COST US$		COST (US$)
Banano River basin	Conduct Level-2 seismic vulnerability study	80,000	Ration water supply for three months from the Moin subsystem (carry out connections and distribute water using tank trucks)	161,900
	Study alternative sources	10,000	Drill aditional wells in La Bomba	70,900
	Improve condition of 2 wells in La Bomba	5,000	Divert nearby surface water sources to the treatment plant	130,000
Banano River intake	Brace control panels	100	Repair control panel	
	Install generator	75,000	Install provisional generator (lease)	360,000
Treatment plant	Construct pretreatment system	300,000	Repair wooden substructure and flocculator screens	20,000
	Brace chlorine cylinders	100		
	Replace wood and screen for flocculators and settling tanks with less fragile material	200,000		
La Bomba wells	Arrange agreement with ICE for priority electric service	0		
	Install 2 electric generators (100 and 50 hp)	40,000		
Pipeline (300 mm)	Replace entire line	1,092,500	Acquire 300 mm pipes and repair the 54 expected breaks	90,000
	Conduct seismic vulnerability study	40,000		
Pipeline (500 mm)	Install 52 seismic-resistant joints	390,000	Acquire 500 mm pipes and repair the 144 expected breaks	360,000
	Identify personnel with welding equipment in area	0		
Total		**2,232,700**		**1,192,800**