GUIDELINES FOR MEDICAL SUPPLIES DISTRIBUTION CENTER

PNSP/89-
Vol. 4

Volume No. 4:
LOCAL CENTERS
PLANNING, DESIGN AND CONSTRUCTION

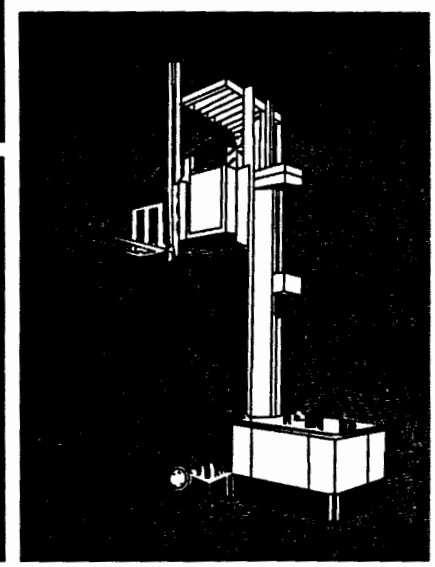

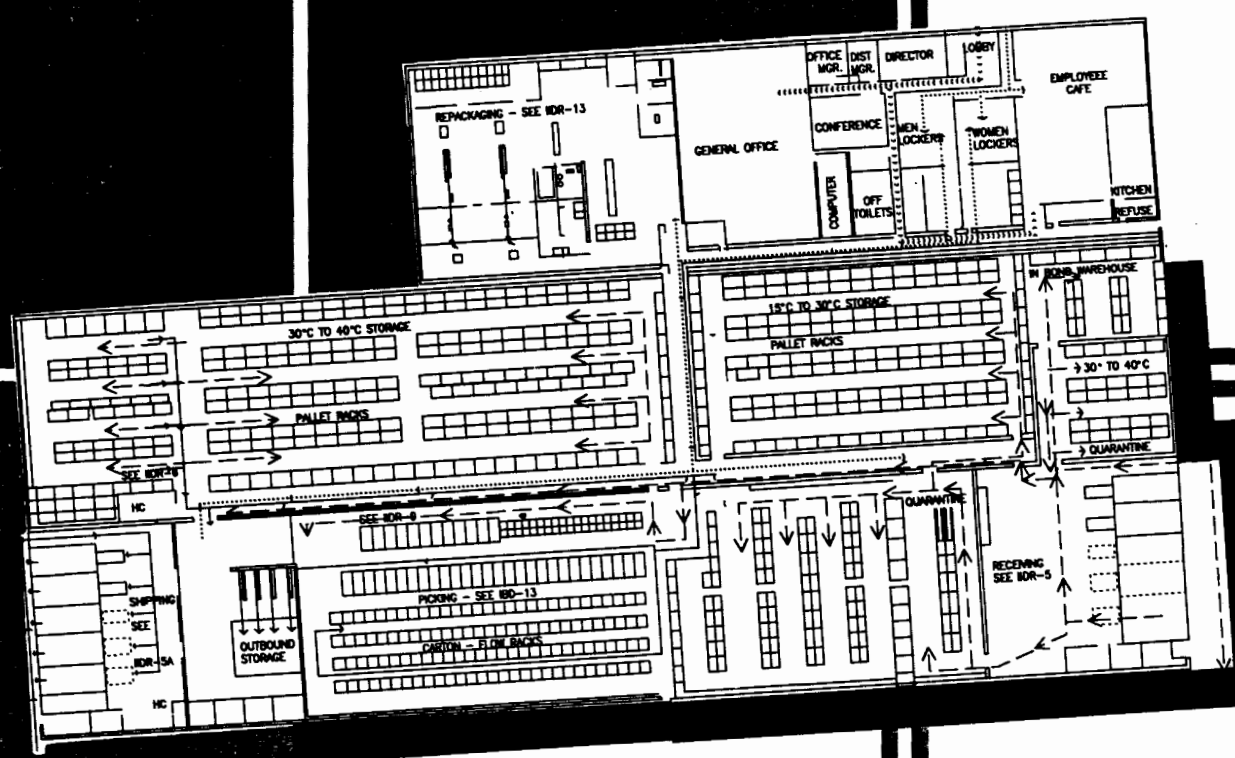

PAN AMERICAN HEALTH ORGANIZATION
Pan American Sanitary Bureau - Regional Office of the
WORLD HEALTH ORGANIZATION

GUIDELINES FOR MEDICAL SUPPLIES DISTRIBUTION CENTERS

Volume 4

Local Centers
—Planning, Design, and Construction—

Scientific Publication No.

PAN AMERICAN HEALTH ORGANIZATION
WORLD HEALTH ORGANIZATION
525 Twenty-third Street, NW
Washington, DC, 20037, EUA

1989

Published also in Spanish as:
Guías para Centros de Distribución de Suministros Médicos
Volumen 4. Centros locales —planificación, diseño y construcción
ISBN: 92 75 32031 4

The publication of this manual, in English and Spanish, has been possible by financial support of the U.S. Agency for International Development under PAHO/AID Project 597-007 as part of the Plan for Priority Health Needs in Central America and Panama.

ISBN: 92 75 12031 5

Foreword

The Plan for Priority Health Needs in Central America and Panama (PPS/CAP) in 1984 made drugs one of its seven priority areas.

Drugs constitute one of the inputs with a high impact on health care costs, representing on average an estimated 20 to 30% of total expenditures on health, and from 40 to 50% of the cost of all inputs utilized in the health services. This situation, in conjunction with other factors, such as the lack of access to drugs by the entire population, population growth, and the economic and financial difficulties facing the countries, evoke reflection about the effort to be made in order to optimeze current investments in drugs through efficient supply systems.

Storage is one of the phases of the supply process that directly influence both the quelity of the product and its cost. The former derives from adequate preservation of the initially established therapeutic and pharmacological quelity of the drug, which requires the maintenance of suitable environmental conditions, in accordance with the particular requirements of each product during the time that it is in the warehouse.

The influence of storage on cost manifests itself both in relation to the maintenance of inventory levels, and to the losses that result from the damage, deterioration, theft, and expiration of products caused by inadequate storage.

The Pan American Health Organization, given the above factors and in light of the problems related to the situation in Central America, saw the need to develop this technical document providing guidelines for the planning, design, and construction of storerooms at the central and peripheral levels, as well as minimum storage requirements, with a view to improving the conditions of drug supply in the Region.

This book, published in Spanish and in English, consists of four volumes, the first three related to regional and central distribution centers, and the fourth aimed at local distribution centers.

Volume 1, Standards for Planning, Design, and Construction, covers in detail the three phases which any engineering project must pass through. Planning is discussed in the first fourteen chapters, from the concepts of organization of working equipment up through criteria to be used in surveys to select an appropriate site for a center to receive, store, distribute, and repackage medical supplies. Consideration is given to safety and the prevention of losses, as well as to appropriate

storage practices. There is an analysis of the critical factors that affect spatial planning, a list for identifying the different types of interior space that are required, and a description of methods and procedures for determining the amount of space needed. There are also two chapters devoted to an extensive discussion of appropriate equipment, including selection and installation costs, as well as evironmental standards for the various classes of interior spaces for a medical supply complex.

The topics of design and construction are covered in the chapters that follow in Volume 1. The purpose is to emphasize approaches to technical aspects, costs, and administration which will allow a project to be brought to completion, both in the anticipated amount of time and within the prepared budget. The technical information that is found in this part is perhaps unique because it refers specifically to the problems and solutions that present themselves at centers for the distribution of medical products as a result of the various types of supplies that are handled, the types of services provided for community health care, and the fact that they are considered to be essential buildings.

Volume 2, Standards for Technical Specifications provides general guidelines to specifications for materials, products, equipment, and installation techniques for some of the industrial equipmet, installations, or construction components in industrial-type buildings designated for the receiving, storage, distribution, and repackaging of medical supplies. It is not an exhaustive document to be used for the purpose of making construction bids, but rather a guide that provides engineers and architects in charge of a project of this type with useful information and criteria. For this reason, the standards have been broken down into three areas: architectural standards, mechanical standards, and fire safety standards. Each unit Includes general information, materials, products, and execution.

Volume 3, Reference Plans, is a graphic supplement to Volumes 1 and 2. It presents 70 plans, most of them drawn to scale, which display general details applicable to the planning and design of regional and central buildings and installations. Each plan has a separate, brief explanation of its principal characteristics and mentions the chapter in which these are indicated. The intention of this set of plans is to provide administrative, planning, and design teams with information which may be adapted to the specific conditions of their own projects and serve as a reference during the preparation of their respective construction plans.

Volume 4 is devoted to local distribution centers. The planning, design, and construction of this type of center is covered in six chapters, and graphic information is provided in six reference drawings.

As a whole this work develops generic guidelines to planning the requirements, facilities, and equipment for the prototype of a center to be used in the storage and distribution of medical supplies. It presents guidelines and methods for the design and construction of such storage centers, in accordance with the planning criteria, and it proposes modes of administration.

Although originally conceived of for Central America, the technical excellence and stimulus associated with this effort makes it applicable to other developig countries.

The technical content of this document was prepared by the Pan American Health Organization, and, along with this publication, was financed by the United States Agency for International Development (U.S./AID), under the Plan for Health Priority Needs in Central America and Panama.

Introduction

The Pan American Health Organization is publishing the present guidelines on the planning, design, and construction of distribution centers at the central, peripheral and local levels, and on minimun storage requirements, as a contribution to the efforts that the governments of the Region are making to improve drug availability for the entire population.

Drugs play an important role in disease prevention and the restoration of health, thus helping significantly to attain the goal fo HFA/2000, as a priority component of primary health care. The processes of drug storage and distribution currently differ greatly in the Region, and there are serious problems in the administration of that input which lead to significant losses, higher costs, and greater unevennsess of quality, availability, and use. The guidelines being published now are an attempt to help solve these problems.

Carlyle Guerra de Madeco
Director
Pan American Health Organization

Contributors:

Enrique Fefer, OPS/OMS, Washington, D.C.
Thomas D. Evans, TPM, Strategic Planners
Leonel Pinot Leiva, Editorial Piedra Santa, Guatemala
Renato Fernández Rivas, Guatemala
Augusto de León Fajardo, Arquisistemas, Guatemala
Humbert J. Tissot, TPM, Strategic Planners
Brian Berg & Associates, LTD.
Dickerson Engineering, Inc.
O'Donnell, Wicklund, Pigozzi & Petersen
Courtesy Graphics, Libertyville, Il.
Data Visuals, Deerfield, Il.
Ileana Santich, OPS/OMS, Washington, D.C.
Ronaldo Luna, OPS/OMS, Washington, D.C.

INDEX

Chapter 3

SHELF STORAGE EQUIPMENT

Chapter 4

HOW TO DETERMINE THE SIZE OF THE DISPENSARY AND STORAGE ROOMS

Chapter 5

INTERIOR ENVIRONMENTAL REQUIREMENTS

Chapter 6

DESIGN AND CONSTRUCTION

Reference Drawings

Introduction

This volume provides basic, simplified guidelines and concepts for planning, designing, and constructing medical supplies storage and dispensing facilities that are located within a health center or clinic of a moderate size. A health center requires a proper location, qualified personnel, good management, continuity of supply and services, and the correct type of physical facilities. The dispensing and storage areas for medical supplies within a health center or clinic are vital components of the physical facilities required for effective operation of the medical supply chain for health care programs.

Although this volume is published apart from the guidelines for planning, designing, and constructing central and regional medical supply distribution buildings, the local distribution center guidelines are an integral part of the total set of guidelines for medical supply distribution buildings for Central America. Furthermore, not only are they an integral part of those guidelines, they are perhaps the most important part because it is from the local distribution centers that the medical supplies are distributed to doctors, medical staff, and patients. The information in this volume assumes that the geographic locations selected for local distribution centers are the result of a total health care system planning effort.

Dispensing pharmacies and their related storage areas for hospitals and larger sized clinics are not included in these guidelines because they require special and relatively complex integration with all of the other physical elements and services of these much larger buildings. The principles of providing the correct type of environmental control as required by the distinct types of medical supplies present and the correct types of equipment for storage and handling medical supplies are, nevertheless, universal. They apply equally to all distribution facilities be they large, medium, or small in physical size.

1

WHAT CONSIDERATIONS STRONGLY INFLUENCE THE PLANNING, DESIGN, AND CONSTRUCTION OF A MEDICAL SUPPLY DISPENSARY AND STORAGE AREA

This section helps you recognize conditions that may:

- cause damage to medical supplies
- create fire and security risks
- attract pests such as birds, bats, rodents, termites, and other insects
- result in exposing the health center building, equipment, and installations to unnecessary physical damage or losses

1.1 FREQUENT CAUSES OF DAMAGE TO MEDICAL SUPPLIES AND THEIR FACILITIES

A health center may have in its medical supply inventory:

- oral and injectable liquid pharmaceuticals
- solid oral tablets, capsules, granules, and powders
- vaccines and sera
- suppositories
- intravenous solutions and solution administration equipment
- surgical supplies
- food and food supplement products
- antiseptics
- laboratory reagents
- office supplies
- medical equipment such as splints, crutches, stretchers, wheel chairs, etc.
- miscellaneous medical supplies

Many of these supplies may be damaged or destroyed by: heat, sunlight, cold temperatures, humidity, earthquakes, pests, surface storm water and flood water, fire, accidents with compressed gas tubes, intruders and thieves, theft of supplies and office equipment or power failure.

1.1.1 HEAT

The product's label should indicate the temperature limits for storage of the product, if any

precautions are necessary. Some of the medical supplies in most health centers will, as indicated by their labels, require one of the following four storage temperatures to avoid damage or destruction:

- -15°C to -25°C (frozen)
- 2°C to 8°C (refrigerated)
- below 30°C (cool)
- below 40°C

Heat from the exterior and the sun must be managed, as well as heat generated by equipment such as the motors on refrigerators, freezers, lights, and other devices. Walls and ceilings absorb and transmit heat from both the exterior and the sun; therefore, they generally must be insulated to significantly reduce the transmission of heat and should have their exterior surface painted a light color to reflect the sun's energy. Exterior windows readily transmit heat; therefore, there should be no exterior windows in a dispensary or storage area.

The building with the dispensary should be located to be in the midday shade of existing trees, but not close to the trees, or new trees should be planted to provide shade. This also will help reduce the temperatures.

Where outside temperatures exceed 30°C or 40°C, mechanical ventilation and/or unit air-conditioners may also be required to control the interior temperatures in the dispensary and storage room within the limits prescribed. Because the total quantity of supplies requiring temperatures below 30°C and below 40°C is moderate, frequently it is convenient to provide a single temperature controlled area that is below 30°C for common storage of supplies requiring either of these two temperature conditions.

1.1.2 SUNLIGHT

Some pharmaceuticals and medical supplies can be damaged by the rays of the sun. The packaging materials for these supplies should have been selected to prevent damage by sunlight; however, if there are no windows, and particularly if there are no sectionalized types of windows with multiple horizontal panes that are so common in Central America, the risk of damage by sunlight can be easily avoided.

1.1.3 COLD TEMPERATURES

Some pharmaceuticals, diagnostics, vaccines, and sera require the classical cold chain lower temperatures to maintain their potencies. Other pharmaceuticals such as water based liquids and intravenous solutions may, during nighttime hours at very high elevations, need to be protected from freezing to assure their stability and to avoid damage to their packaging, though the incidence of this problem should be very low in Central America. Just as heat is transmitted through windows, walls, and roofs, so is cold. The remedy for transmission of cold is the same as for the transmission of heat. Minimize the transmission of cold by insulating the roof and walls, and do not install windows in the dispensary and storage area.

1.1.4 HUMIDITY (Water Vapor)

Many pharmaceuticals and medical supplies and their packaging are subject to damage by humidity and moisture. The four most common sources of water vapor are:

- high exterior levels of humidity that invade the area through open doors and windows
- transmission of water vapor from the exterior through masonry walls and floors to the interior
- condensation of humid air when it contacts cooler surfaces
- leaks through the roof

The first line of defense against damage by moisture is selecting the appropriate packaging for the products and then maintaining the products and supplies tightly sealed in their respective containers.

The second line of defense for the supplies is correct storage practices. Supplies should never be in direct contact with exterior walls or the floor. Shelv ing installed against exterior walls should have a back panel and be installed with a small air gap between the wall and the back panel so that air can circulate. Floors present a similar problem, and supplies should always be stored on pallets or skids that are designed to provide a slight elevation above the floor and away from the walls so that air can circulate between the supplies and the floor and walls.

The third line of defense is a unit air-conditioner to remove atmospheric moisture (humidity) in the medical supply dispensing and storage areas. Based on local environmental conditions, this unit must operate continuously in some regions of Central America but only occasionally, if at all, in other regions to provide suitable temperature conditions. The same unit will also reduce the humidity.

The fourth, fifth, and sixth defenses are a polyethylene plastic film between the floor and the earth that acts as a vapor barrier to moisture in the ground, a watertight roof membrane, and roof/wall and floor/wall joint systems that are weathertight.

1.1.5 EARTHQUAKES

Many of the regions of Central America are in moderate to high risk seismic zones. The potential problems range from total collapse of a building onto the supplies and personnel at one extreme, and at the other extreme to interruptions of electrical power and water, to shelving and cupboards tipping over, and to supplies falling from the shelves and breaking because of the fall.

To avoid collapse of a building or significant structural building damage, a building must be properly located so that it is compatible with the sités topographical and geotechnical conditions, especially where unstable soil is present. In addition, each structural element of the building (viz., beams, columns, etc.) must be designed for the seismic conditions present in the zone.

The problems with shelving and cupboards are avoided by bolting them to the floors and walls and providing bracing between rows of shelving, where so indicated by a qualified structural engineer. Furthermore, to minimize the potential for damage to supplies that may fall from shelves to the floor, restrict the front of the shelving by tying bands of narrow diameter flexible plastic tubing (e.g., tubing from used intravenous solution administration sets might be a convenient low-cost tubing source) or strands of wire between the posts of the shelving.

1.1.6 PESTS

Buildings that are not weathertight and well con structed contain openings through which birds,

bats, rodents, and insects including termites can enter. Food, open containers of medical supplies, wood, and other similar materials attract many of these pests. Dispensing and storage areas should be located away from all areas where food or food supplies may be present. Waste containers should be provided and properly emptied at least daily. In lobby areas the practice of patients' bringing food to eat while waiting should be discouraged through the use of signs and administrative controls.

The building, equipment, furniture, and fixtures should be constructed of masonry materials, metal, plastic, and similar types of materials and not of wood or wood composite products. All openings to the exterior, including doors, should be protected with insect screens.

1.1.7 SURFACE STORM WATER AND FLOOD WATERS

The site selected for any health clinic or center should be above the 100 year flood level in the area and generally away from streams, rivers, and shore areas where flooding may occur. The topography of the area where the site is located should be relatively flat. The final grading of the site, after construction is completed, should direct surface storm water away from the building, including the storm water from the adjacent and nearby land areas. Excavation of a steep hillside to create a flat area for a building's floor is an unsatisfactory practice because it creates the requirement and the associated costs for installations for storm water control systems, other than simple grading, to control the surface water and to prevent flooding. The height of the floor above the final grade of the site should also be established to protect the building and its contents from potential surface water damage.

1.1.8 FIRE

To create a fire the three elements of fuel, air, and an ignition source must be present in the correct proportions and under the proper conditions. The easiest way to prevent a fire is to eliminate one or more of these three elements. Since in this type of situation air generally cannot be eliminated, eliminate the following:

Common Ignition Sources	Method of Elimination
Smoking materials	— Prohibit smoking.
Electrical short circuits	— Install electrical systems correctly and provide sufficient electrical capacity and receptacles. — Maintain the electrical installations and equipment in excellent working condition and avoid the use of extension cords.
Rodents and electrical installations	— Seal openings to the exterior of the building and keep the building clean.
Electric motors, panels, and other electrical installations	— Keep materials away from electrical installations. Keep motors clean, includ ing the grilles in equipment that con tains a motor, so that air can circulate freely to cool them. Keep the doors to electrical panels closed tightly.

Common Fuel Sources	Method of Elimination
Flammable liquids (viz., alcohol, acetone, ether)	— Reduce inventory levels to the absolute minimum! — Keep containers tightly closed. — Store flammable liquids only in metal or moderately heavy plastic containers. Never store flammable liquids in glass containers. — Store the containers at floor level to prevent them from falling and breaking. — If a leak occurs or a container breaks, immediately remove the container outside the building, wipe dry any residual liquid present, and dispose of all wet wipes outside of the building. — Store flammable liquids as far away as possible from all electrical installations including switches, receptacles, and motors.
Wood	— Do not use wood as a construction material except to make forms for concrete work, or to prepare other temporary installations that will be removed before the building is occupied. — Use masonry, metal, plastic and other non combustible materials. The only exception to this rule is for the wooden pallets or skids for floor storage of medical supplies, if required.
Waste paper and plastic film	— Empty all waste containers at least daily. — Remove the waste materials to an area outside of the building daily, and from the site frequently (e.g., at least weekly). — Dispose of waste materials properly.
Empty corrugated boxes, plastic containers, cartons, and other packing or packaging materials	— Do not store them! — Disassemble them and dispose of them in the same manner as other solid wastes.
Liquefied petroleum gas (propane) or natural gas	— Except for possible gas-fueled refrigeration equipment, there should be no requirement for gas in the dispensary or storage area. — Use electrical refrigeration equipment whenever possible.

1.1.9 ACCIDENTS WITH COMPRESSED GAS TUBES

Restrain each full compressed gas tube present and all empty tubes by chaining them to sturdy supports that are securely mounted to strong elements of the building such as a wall. If a compressed gas tube falls and the valve assembly breaks, the result can be similar to a torpedo running wild within the building, and perhaps a fire too, depending on the type of gas present.

1.1.10 INTRUDERS AND THIEVES

The topography of the site should be such that no one should be able to jump from a cut bank of earth onto the building's roof or jump over a perimeter fence. The landscaping of the site should also prevent a potential intruder from dropping from a tree inside the fenced area, if any, or onto the roof of the building. Trees should be at least 10 m. away from all buildings and fences. Utility poles should also be located so they do not provide a means to reach a roof or to cross a fence. Shrubbery around buildings should be low in height and mass to avoid concealing intruders. It should be kept away from entrances, walls, and openings and distant from all fences. The exterior surfaces of the building should have no projections or recesses that could conceal potential intruders.

Depending on the type of medical facility in which the dispensary and storage area are located, a fence around the perimeter of the health center's or clinic's land areas, with a gate that can be closed when the center is not attending patients, may be desirable to in hibit intruders. Steel chain mesh fences provide both security and visibility from vantage points beyond the fence. A perimeter fence, if provided, should be of a design such that it will not provide a ladder effect that an intruder could easily climb.

Exterior lighting of the site by either pole mounted street lights or building wall mounted fixtures of a type that spread or "wash" the exterior walls of the building with light, in addition to fencing of the areas, is an excellent and practical security measure. Light-colored exterior walls also make it easier to see intruders at night.

Buildings should be located well inside of any fence, setback, or land boundary line. No exterior wall of the building should be used as an element of a site fencing arrangement, since the building wall might easily be penetrated from the street side of the wall by an intruder and entrance gained to the building's interior. Also, an intruder could easily place a ladder against the building's wall from the street and gain rapid access to the roof.

The exterior doors and door frames of the health center and the interior doors and frames to the dispensary and storage area should be painted steel reinforced hollow metal work. The frames should be built into the masonry walls. The doors should have internal hinges, or the hinge pins in external hinges should be spot welded to the hinge plates to prevent easy pin removal and then door removal by burglars. Heavy steel security type pad lock hasps and locks should be used rather than internal keyed latches.

There should be no windows in dispensary or storage areas because they not only contribute to temperature and humidity problems, but are also perhaps the easiest opening for an intruder to gain entry into a building. To the extent they are minimized in adjacent areas of the health center building, security will be improved. Windows in other areas of the building should be as high above the floor as possible and limited to the sides of the building that are easily observed.

Even a protective exterior grating of steel bars can rather easily be pulled out of a window frame or the ad jacent masonry with a vehicle and cable or chain. Any roof, ceiling, or wall penetrations larger than 15 cm. x 15 cm. should also have a steel bar grating securely mounted to the interior side of the opening. Any opening to the roof should have a steel frame, cover, and hasp that can be padlocked from the inside.

Wall mounted air-conditioning equipment should be located as high as possible in the wall and the equipment and its steel mounting assembly securely bolted to the interior as well as to the exterior surfaces of the building to deter entry.

1.1.11 THEFT OF SUPPLIES AND OFFICE EQUIPMENT

The interior combination entry/dispensary door from the vestibule of the health center to the dispensary should have a padlock on the exterior side (vestibule side) of the dispensary's door. In addition, there should be a heavy steel bolt and latch assembly on its interior surface to secure the top part of the door to the door frame when the dispensary is closed but when other areas of the health center or clinic are open. An internal key lock on the vestibule side and thumb latch on the dispensing side of the lower portion of the door should also be provided so that it can be secured at all times, even when the top part of the door is open. If prescription volumes are high and several dispensing openings are required to attend to patients, permanent type bank teller or theater ticket office type dispensing windows could be built into the wall of the dispensary. These would be preferable to a combination entry/dispensary type door when large quantities of people must be attended.

The arrangement of the combination entry/dispensary type door and the shelf storage equipment and office furniture and equipment should be such as to prevent anyone at the door from reaching any of the medical supplies on the shelving or anything of potential value on the office furniture or wall surfaces adjacent to the door. See Reference Drawings IDR-1 and IDR-2 for a graphic descrip tion of the combination entry/dispensary type door. If controlled or high value drugs are present, a small safe that might be a built-in component of the of fice furniturés work surface and storage system, or an independent unit of sufficient weight so as to be not easily removed, should be provided for these items that are so frequently the targets of thieves and burglars.

1.1.12 POWER FAILURE

Interruption of the supply of power will affect the air-conditioners, where present, in the dispensing and storage rooms, the refrigerator/freezer, and lighting. If electrical power to operate the air-conditioners is interrupted for a few hours or days, damage to supplies in the dispensary and storeroom should be minimal to none, provided all supplies are in their original containers and the containers are tightly closed. Battery-powered flashlights should be used to provide a temporary source of light, if required. Vaccines, sera, and other supplies that require low temperature storage are the supplies subject to the most damage due to a power failure. Power failure precautions and emergency action to be taken to minimize damage to them should be in accordance with the cold chain recommendations published by the World Health Organization, the Pan American Health Organization, and the Ministry of Health.

2

WHERE TO LOCATE THE MEDICAL SUPPLY DISPENSARY AND STORE ROOM

2.1 LOCATING THE MEDICAL SUPPLY DISPENSARY AND STORE ROOM WITHIN A HEALTH CENTER AND PLANNING FOR FUTURE EXPANSION

The dispensary should be located in the coolest part of the building and whenever possible with its longest exterior wall on the north side of the build ing to limit its exposure to the direct rays of the sun. Reference Drawing IDR-1 illustrates the potential position of a dispensing and storage area in a health center. Note how the location has been selected and provisions made for future expansion.

Reference Drawing IDR-2 provides additional information on desirable layout and furnishing concepts for the dispensing and storage room, including provisions for future expansion. Reference Drawing IDR-3 describes a method for expanding a properly planned building at a future time. Note that future new construction should not be disruptive to the continuing operation of the dispensary while the expanded area is being built. Planning for the future is never 100 percent perfect, and some decisions that anticipate future requirements will occasionally be wrong. If there is no planning for the future, however, just about every decision will be wrong!

2.2 HOW TO DETERMINE THE QUANTITY OF LAND REQUIRED

First, determine the floor area to be constructed now. Next, make plans for future expansion and deter mine the area to be reserved for future expansion. See Reference Drawings IDR-1, IDR-2 and IDR-3 for additional information. Multiply the sum of the current and future planned area by two to determine the approximate land area required. For example in Reference Drawing IDR-1, the total planned constructed area is 216 m^2, with approximately 156 m^2 constructed now and 60 m^2 at a future time. The minimum required land area is 216 m^2 x 2 = 432 m^2, which is then rounded up to 450 m^2, as shown on the drawing.

2.3 FACTORS TO EVALUATE WHEN LOOKING FOR LAND AND SITUATING A BUILDING ON THE LAND SELECTED

The location of the center should be such that there is access to it from at least two directions

from all of the area the center serves, regardless of climatic conditions or seismic events. The neighboring buildings, if any, should ideally be residential in nature or clean-type commercial operations, but not meat or vegetable markets, grocery stores, restaurants, etc., where food is present that attracts rodents, winged insects, etc.

The lot for the health center and dispensary should be of sufficient size to permit expansion in the future, be reasonably flat, and have good stable soil conditions. Note the favorable and unfavorable topographic conditions in the top right hand corner of Reference Drawing IDR-1. The elevation of the lot should be such that there is no exposure to flooding by surface or other waters.

Water from a municipal source or well is required as well as access to a municipal sewer. If a municipal sewer is unavailable, then a sanitary waste treatment installation should be provided for the center. Soil conditions should be suitable for disposing of these sanitary liquid effluents. Electric power should be provided to the site by the power company at the voltages required.

Other property factors to consider include:

- storm drainage adequacy
- characteristics of adjacent properties
- availability of telephone service, if required
- the property's location with respect to key roads, streets, and public transportation routes.

3

SHELF STORAGE EQUIPMENT

This section will help you:

- be aware of the different types of shelving components and shelving accessories that may be useful for your storage needs
- select storage equipment and accessories

3.1 METAL SHELVING AND ACCESSORIES

Painted, plated, or coated steel shelving is one of the most common systems used to store medical supplies. Wood should not be used, since it attracts and harbors pests and is combustible. Stock steel shelving units usually are approximately 2.1 m. in height, 0.9 or 1.2 m. in width, and range from 30 cm. to 90 cm. deep in increments of 15 cm., although some manufacturers offer a still broader variety of sizes in addition to these. Because of the problem of reach when standing on the floor, storage efficiencies in the deeper shelving units and at the higher shelf levels are usually poorer than when shallower shelves and lower heights (viz., 1.5 m.) are utilized. The sides and back of the shelving may be open or closed. If the sides and back are open, cross braces should be used to stabilize the system. The sheet metal sides and back of a closed shelving unit provide stabilization, and, therefore, cross bracing is generally not required. Closed type shelving prevents supplies from falling off of the back or sides of the shelves. The shelves may be either adjustable or fixed in height. Shelving systems have many basic components and optional accessories that can be selected to tailor the shelving to special applications (viz., drawers, bins, or shelf boxes to store small articles; doors, vertical dividers, front bin stops to prevent objects from rolling off the shelves, etc.).

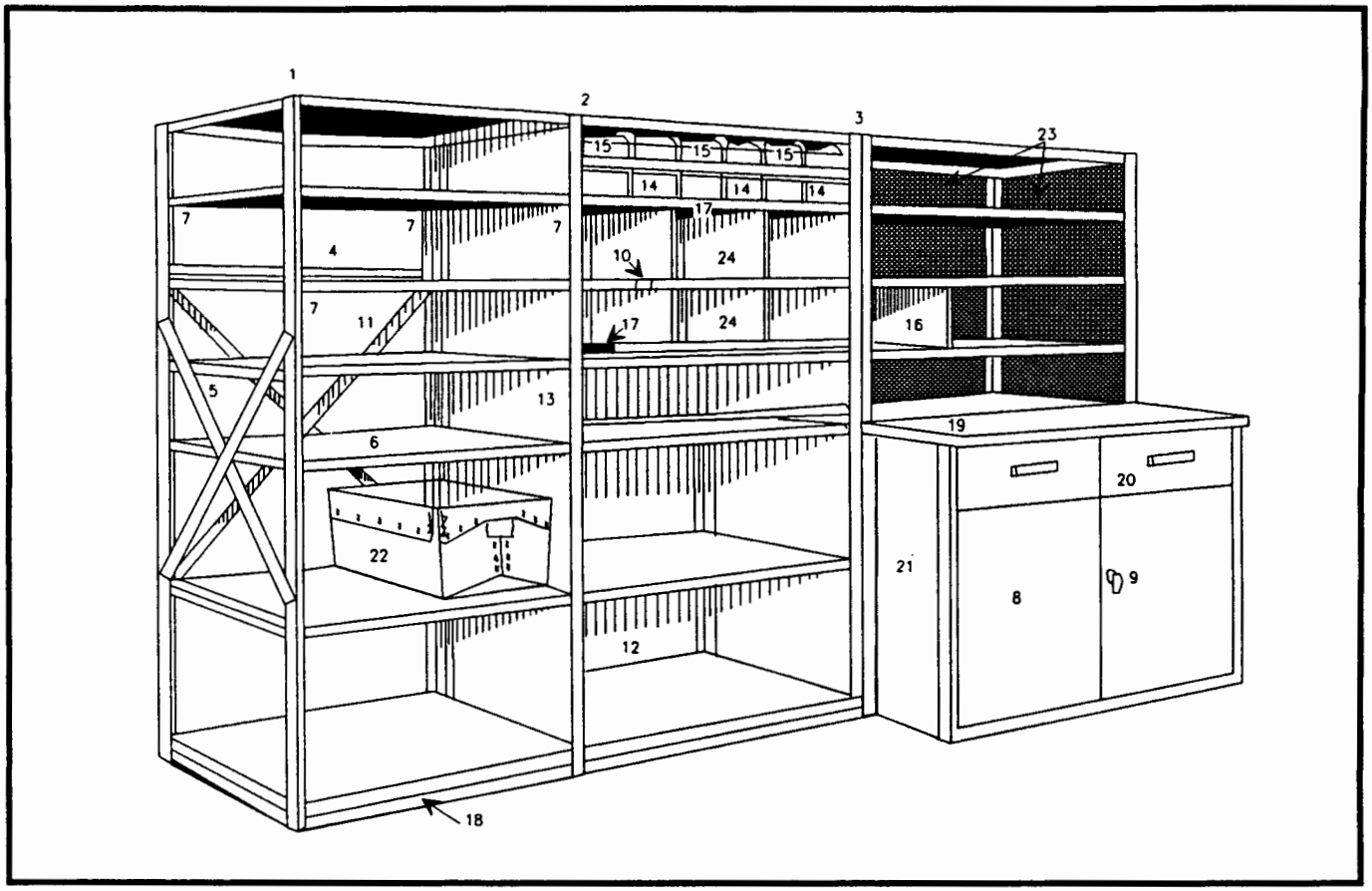

Figure No. 1

1.	Angle posts	13.	Closed side panel
2.	T-posts	14.	Shelf box
3.	Beaded posts	15.	Shelf bin
4.	Rear package stop	16.	Shelf divider - vertical
5.	End sway brace	17.	Front bin stop
6.	Industrial-duty shelf	18.	Base cover strip
7.	Shelf clip	19.	Counter top
8.	Double door and frame	20.	Drawer
9.	Locking handle	21.	Cover plate
10.	Label holder	22.	Tote box
11.	Rear sway brace	23.	Wire mesh side/back panel
12.	Closed back panel	24.	Shelf storage bin

The corner posts of the shelves are the main supporting (i.e, load bearing) elements. There are four basic types of post design.

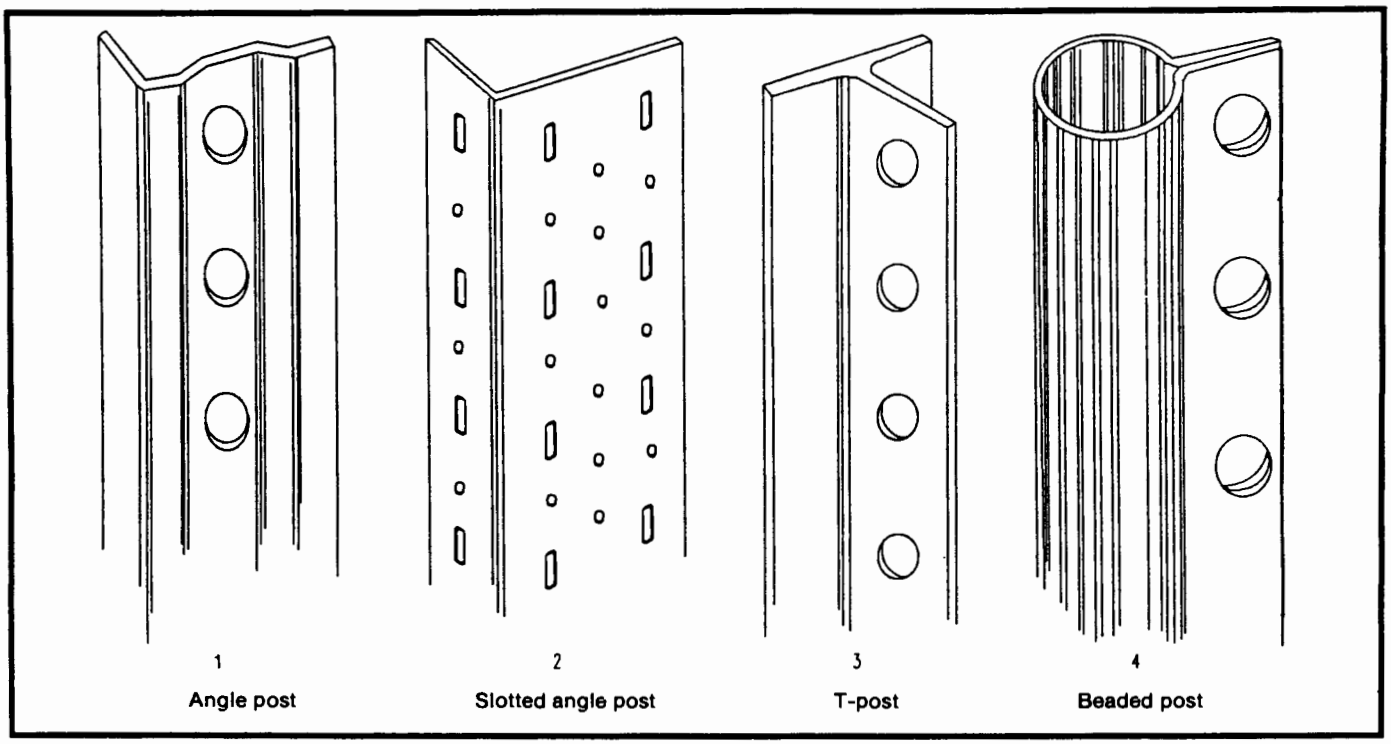

Figure No. 2

The angle post is generally the least expensive to purchase. It generally requires nut and bolt as sembly. When angle posts are used, each four-post shelving unit is completely self-contained; there are no common posts between multiple shelving units. Angle post shelving units are generally limited to supporting lighter loads and should be adequate for most dispensary applications.

Slotted angle posts are similar in assembly and usage to the angle post shelving systems. This material can be purchased in standard lengths and widths to meet most weight requirements.

The T-post, when used in shelving systems, forms a common upright between sections of shelving. Clips are the most widely used method to attach shelves to the T-post. Although this type of post requires the least amount of time to assemble, the face of the post is relatively wide and tends to encroach on the shelf storage space.

The beaded post, in contrast, allows better shelf entry access since it is narrower. However, it does not have as much load bearing capacity as the T-post for heavy-duty applications. This type of post also facilitates fast shelf height adjustment since the shelves do not have to be tilted as much when they are put in or taken out.

In addition to the load carrying capacity of the posts, the shelves themselves must also support the weight of the supplies with minimal sagging (deflection). Based on the weight and quantity of the product to be stored on each shelf and the type of product to be stored, solid sheet metal or expanded wire metal mesh shelves of the correct capacity should be selected. Based on the total loaded weights of the shelves in each shelving unit, posts of the correct supporting capacity should be selected.

The bottom shelf should either be mounted ap proximately 15 cm. above the floor so that the floor can be cleaned, or a base cover strip should be in stalled between the bottom shelf and the floor. When planning shelving installations:

- select shelving units that are of modular design and that preferably are clipped, rather than bolted or welded together, for easy assembly and adjustability
- select closed type shelving that has sides and backs
- determine the load supporting capacities required for the shelves and posts and select the shelving components with the correct load supporting capacities accordingly
- select the shelving accessories required for your special needs
- consult the shelving manufacturer and a qualified structural engineer to obtain the special additional equipment and accessories that are required for this type of equipment in areas of higher seismic risk. Obtain specific instructions on how to install the shelving to prevent its tipping over. This may include welding steel plates to the bottoms of the posts so that the posts can be securely anchored to the floor with expansion bolts, bolting the posts to the walls (use spacers so the back of the shelving unit is not in contact with the wall), and special bracing between multiple rows of shelving units
- utilize bins on shelves for small articles, a method to restrain the bins on the shelves, and similar concepts in areas of high seismic risk to prevent supplies from falling to the floor each time there is a minor tremor. Flexible vinyl tubing might also be tied between the posts at an appropriate height above each shelf to help restrain bins and items on the shelves.

4

HOW TO DETERMINE THE SIZE OF THE DISPENSARY AND STORAGE ROOMS

This section will help you determine:

- floor area requirements
- equipment, furniture, and fixture requirements
- arrangement of the equipment, furniture, and fixtures

4.1 WHERE TO BEGIN?

The dispensary and storage rooms must accommodate three dissimilar operations. The dispensary requires space for: 1) administrative work, 2) highly accessible refrigerated and shelf storage for dispensing medical supplies, and 3) support services such as access aisles and a sink. The storage room only requires space for storage with access aisles.

4.2 WHAT ARE THE ACTIVITIES THAT STORAGE SPACE PLANNING MUST CONSIDER?

Careful inspection of the activities in a dispensing and storage area will reveal that there really are quite a variety of storage operations taking place and that each may have specific factors that dictate that particular operation's requirements for space or its location. If a storage area is required, for example, there should be:

- direct easy access to it from the dispensary
- easy access to it from the vestibule of the health center so that supplies can rapidly be placed in it when deliveries are received without unnecessary disruption of all other activities in the dispensary
- aisles of sufficient width within the storage area so that all the different materials stored are readily accessible without having to move everything in the room around, or out of the room, to find a supply
- space for the door to open into the storage area
- floor space, or shelving, and perhaps wall mounted brackets for storing difficult items such as crutches, stretchers, or other storage devices in sufficient quantity and of the style required for the material being stored

4.3 WHAT ARE BASIC PRINCIPLES OF STORAGE SPACE PLANNING?

To plan storage space, remember that:

- the volume and physical characteristics of each type of supply stored determines the type (viz., shelf, floor skid, walls bracket) and quantity of storage equipment required,
- the number and type of storage equipment units, or floor area if floor storage is used, including aisles for easy access to them define the storage space requirements,
- total storage space requirements must be planned to accommodate the supplies when they are at their highest inventory level, and
- the more frequent the deliveries and the more reliable the sources of supply are in deliver ing all of the items ordered, on time, and in the quantities ordered, the lower the amount of storage space required. The more erratic and unreliable the source of supply, assuming no other restriction, the greater the amount of storage space required.

4.4 HOW SHOULD THESE PRINCIPLES BE APPLIED TO SPECIFIC STORAGE ROOM REQUIREMENTS?

The first task is to determine if a storage room is needed at all. Frequent reliable deliveries, for example, such as biweekly, monthly, or bimonthly deliveries generally should eliminate the need for storage space in most local distribution centers since all supplies can probably could be stored directly in the dispensing area. If, however, there are significant quantities of difficult items to store such as wheelchairs, crutches, canes, etc., a separate storage area may be considered. If it is necessary to store many boxes of a single item that would occupy more than, for example, 40 to 50 cm. of lineal shelf space in the dispensary to meet all requirements from the date of the last delivery until the scheduled date of the next delivery, use of a separate storage area may be indicated. If there are several supplies such as oral rehydration pouches or solutions that are bulky and highly seasonal in demand, a separate storage area probably is required.

To estimate the amount of storage space:

1. determine what supplies will be stored in the storage room, and list them
2. assign a storage method (viz., floor stack, shelf storage, wall bracket, etc.) to each item, and record the method assigned
3. estimate the highest number of individual units of each item to be stored, and record the number and the description of the unit (viz., box of six pouches, pair adjustable adult crutches, etc.)
4. determine the actual volume of an individual unit for each different item to be stored by measuring it and calculating its volume, and record the results
5. for each item listed in Step 2 that requires shelf storage, multiply the maximum units to be stored, (data is on the list prepared in Step 3), by the volume of the item (data is on the list prepared in Step 4), to determine the unadjusted volume of shelf storage space required for each item, and record the results. Determine the total unadjusted volume for all shelf storage items by adding all the volumes for all items listed, and record the results
6. determine the individual and total unadjusted volumes of space required for floor storage on skids and for other storage methods utilizing the same method described in Step 5, and record the results

floor storage	_____	m^3
wall brackets storage	_____	m^3
other methods	_____	m^3

4.5 HOW TO CALCULATE FLOOR SPACE REQUIREMENTS FOR SHELF STORAGE UNITS FOR SUPPLIES

A. multiply the total unadjusted shelf space volume by 1.33 (75 percent space utilization efficiency factor) to determine the approximate total adjusted shelf storage space volume required, and record the result in m^3.

(Note: Space utilization efficiency on storage shelves is much higher than for shelves that will be used for dispensing supplies. Supplies can be rather densely placed on storage shelves but must be highly accessible and totally visible on dispensing shelves. Make sure you use the correct adjusting factor for each of these two different applications.)

B. measure the volume of shelf space each complete shelving unit will provide (viz., one unit may consist of a frame with four or more shelf levels), and record the result. Make sure to measure only the internal storage area of the unit and not its external dimensions

C. divide the adjusted total shelf storage volume required (Step A) by the storage volume of a standard shelving unit (Step B) to determine the number of shelving units required, and record the result

Example:
Let's assume, for example, your calculations in Step C indicate that:

- 3 storage units of shelving are required
- the shelving units will be arranged in a single side by side row against the wall as shown on Reference Drawing 2
- the dimensions of each of the units is 45 cm. deep, 80 cm. wide and 180 cm. tall
- an access aisle of approximately 80 cm. is provided in front of the shelving units.

The minimum net floor space required for shelf storage of supplies is:
Shelf Row Area:

- shelves x 0.80 m. width/shelf unit x 0.45 m. depth = 1.08 m^2

Aisle Area:

- shelves x 0.80 m. width/shelf unit x 0.80 m. aisle = 1.92 m^2

The minimum net required floor area for shelf storage is 3.00 m^2

4.6 HOW TO CALCULATE FLOOR SPACE REQUIREMENTS FOR FLOOR STORAGE OF SUPPLIES

Space requirements for items that will be stacked on pallets or skids that are on the floor are calculated in very much the same manner as follows:

A. From Step 6 above, determine the total unadjusted volume of space required for floor storage and multiply that volume by 1.25 (80 percent space utilization efficiency factor) to

determine the approximate total adjusted floor storage volume required, and record the result.

B. Measure or establish standard dimensions for the pallets or skids that are to be placed on the floor.

Let's assume a skid with dimensions of 0.8 m. depth x 1.7 m. width is selected. The area of the skid is 0.8 m. x 1.7 m. = 1.36 m^2. Let's also assume that the maximum stacking height will be 1.50 m. If we multiply the area of the skid by the stacking height, the result is the standard volume of storage (capacity) of each skid on the floor —1.36 m^2 x 1.5 m. = 2.04 m^3

C. To determine the number of skid storage positions required, let's assume that the calculations in Step A of this section indicated that 9.3 m^3 of adjusted floor storage volume is required. Divide the total adjusted storage volume required by the standard volume per skid and round up the result to the next whole digit 9.30 m^3: 2.04 m^3 = 4.56 skids = 5.0 skids

D. To determine the total storage area required for supplies stored on pallets on the floor, let's assume that there will be one row of three skids on the outside wall and one row of two skids side by side against the opposite wall, with a 0.80 m. aisle between them.

Aisle Area:	
3 skids x 1.7 m. wide skid x 0.8 m. wide aisle =	4.08m^2
Outside Skid Row:	
3 skids x 1.36 m^2/skid =	4.08m^2
Inside Skid Row:	
2 skids x 1.36 m^2/skid =	2.72m^2
Wall to Skid Clearance:	
2 walls x 3 skids x 1.7 m. wide skid x 0.1 m. clearance =	1.02m^2
The minimum net floor area required for floor storage is:	11.90m^2

4.7 HOW TO CALCULATE FLOOR SPACE FOR OTHER METHODS OF STORAGE

Use a methodology similar to that used for skids and storage shelving units.

4.8 HOW TO CALCULATE THE TOTAL FLOOR SPACE REQUIREMENTS FOR THE STORAGE ROOM

To determine the total storage room floor area, add the shelf storage area, and floor storage area, and storage areas required by other storage methods:

Shelf Storage Area	3.0 m^2	
Floor Storage Area	11.9 m^2	
Other Storage Area	——	
Total Net Storage Area	14.90 m^2	approximately

Note that during this process, the assumptions used for the configuration of the storage equipment of 3 skids on the outside wall and 2 skids on an inside wall plus an aisle, and 3 shelf

storage units side by side plus an aisle has begun to specify a shape for the room. This shape may or may not be optimum. The architect responsible for the project should determine if other configurations of the storage equipment would provide better space utilization. For this reason this preliminary calculation is considered an ap proximation. The architect is also responsible, depending on the final arrangement of the storage equipment, for adding space for additional access aisles, space for the swing of the door, etc.

You must tell the architect that your calculations are based on equipment of certain dimensions, how many units of each type of equipment are required, what the minimum acceptable aisle widths are, and you must provide dimensional data, your calculations, and any sketches to the architect for review and refinement.

4.9 HOW TO DETERMINE SPACE REQUIREMENTS FOR THE ADMINISTRATIVE AREA IN THE DISPENSARY

Administrative space planning is generally heavily influenced by two factors:

- the number of dispensary employees that are in any way involved with paperwork
- the office furniture, fixtures, and equipment required to support the operation.

The administrative operations within the dispensary may involve preparing and maintaining inventory records, reporting prescription data, preparing time reports and damaged supply reports, requisitioning medical supplies and maintenance services, filing, miscellaneous correspondence, referral to medical and technical publications, etc.

The administrative work associated with health center dispensaries is frequently one of the least un derstood factors, and, therefore, the administrative area is one of the most undersized and poorly equipped areas of most centers. Note on Reference Drawing IDR-2 the administrative area at the top of the drawing and how it might be equipped, including its relatively large horizontal work surface that is required to handle all of the paperwork that the employees must manage. An administrative area of the size indicated in the reference drawing is close to ideal for a dispensary with one employee, would be crowded if there were two employees, and is much too small if it had to serve three employees.

To determine administrative space requirements, prepare a list of furniture, machines, and fixtures; list the number of employees that will utilize the area now and in the future; and present these require ments to the responsible architect who should be able to rapidly translate them into sketches and floor space requirements. Generally for each employee, not less than 8 net sq. m. of administrative space should be provided. Furniture selection (viz., nonmodular) and layout may have a significant expansive effect on this minimum value.

4.10 HOW TO DETERMINE THE SIZE OF THE DISPENSARY

The dispensing area should be essentially an area that provides space for:

- shelving storage units for medical supplies
- a refrigerator/freezer

- a sink with one or two drain boards on either side of the basin and a floor drain in front of the sink
- a peg board above the sink for drying glassware and other items
- wall brackets, and other types of storage equipment, as required.

Reference Drawing IDR-2 graphically illustrates these installations, except for the wall brackets that could be placed on the rear wall of the dispensing area, if required.

4.11 HOW TO CALCULATE FLOOR SPACE REQUIREMENTS FOR DISPENSING SHELVING UNITS

Space requirements for the dispensing shelving units are calculated in accordance with the method described in Steps 1 through 6 at the beginning of this chapter, but only for the items and quantitites that will be on the shelving in the dispensary. There is a big difference between shelving unit requirements for dispensing areas and storage areas! It is the efficiency in which the actual shelf storage space is used. In dispensing unit shelving, the space utilization factor is only 25 to 33 percent efficient as compared to approximately 75 percent efficient in storage areas. This is because most items in a dispensing area must be totally visible and readily accessible, and, therefore, cannot be packed densely on the shelves.

A. Multiply the total unadjusted shelf dispensing volume required by 4 (25 percent space utilization efficiency factor) to determine the approximate total adjusted shelf dispensing volume required, and record the results in m^3

B. Measure the volume of shelf space each complete shelving unit will provide (viz., a unit may consist of a frame with four or more shelf levels) and record the result. Make sure to measure only the internal storage area of the unit and not its external dimensions.

C. Divide the adjusted total shelf storage volume required (Step A) by the storage volume of a standard shelving unit (Step B) to determine the number of shelving units required for dispensing, and record the result.

Let's assume, for example, your calculations in Step C indicate that:

- 11 dispensing units of shelving are required
- the shelves will be arranged in a back to back row of 3 shelving units each and 2 rows of 4 shelving units each against each wall as shown on Reference Drawing IDR-2
- the dimensions of each of the units is 40 cm. deep, 90 cm. wide, and 180 cm. tall
- an access aisle of approximately 80 cm. is provided between the rows of shelves

The minimum net dispensing shelf floor area required is:

Aisle Area Including the Refrigerator:		
2 aisles x 4 units x 0.90 m. width/shelf unit x .80 m. aisle	=	$5.76m^2$
Shelf Row 1 & 4 Areas:		
2 rows x 4 shelves x 0.90 m. width/shelf unit x 0.4 m. depth	=	$2.88m^2$
Shelf Row 2 & 3 Areas:		
2 rows x 3 shelves x 0.90 m. width/shelf unit x 0.4 m. depth + 0.90 m^2 for the refrigerator	=	$3.06m^2$
The minimum required dispensing shelf floor area is:		$11.70m^2$

The sink should be wall mounted and cantilever supported, or be cabinet mounted. The basin of the sink should be approximately 30 cm. in depth to minimize splashing, 30 cm. wide (i.e., front to back), and 66 cm. long. The floor area in front of the sink should be equivalent to approximately twice to three times the area of the entire sink unit, depending on the layout of the entire dispensing area, to avoid congestion when the sink is in use.

To determine the dispensary floor area requirements, calculate the sum of the:

- administrative area requirements _____ m^2
- adjusted dispensing shelving units' floor area requirements _____ m^2
- twice the area occupied by the base of the refrigerator/freezer (to accomodate its door swing) _____ m^2
- the sink area including the area in front of it _____ m^2
- the wall bracket area, if any _____ m^2

_____

- Total net dispensary floor area required _____ m^2

The actual floor area of a dispensary is highly influenced by the number of personnel working in the dispensary, the types and quantities of medical supplies in inventory, the frequency of medical supply deliveries, total or only partial delivery of all the items ordered, the types of dispensing materials used (if any), etc. For these reasons, it is not feasible to make specific recommendations on minimum dispensary area requirements.

The reference to net m^2 required throughout this chapter is a term familiar to architects and planners. It excludes the thickness of walls, exit corridors, and other similar requirements that, of course, are required. A building will always be larger, therefore, than the sum of the net storage and dispensing areas.

5

INTERIOR ENVIRONMENTAL REQUIREMENTS

This section will help you:

- establish design criteria and service require ments for the interior features and furnishing of the medical supply dispensary and store room

5.1 BARRIERS

Walls, doors, floors, and ceilings are required for containment of the area as a weathertight, pestfree, and ventilated or air-conditioned space. Food storage and preparation areas shall be separate from these facilities.

5.2 CONSTRUCTION AND FINISHES

5.2.1 FLOORS

Monolithic reinforced concrete, that is:

- pigmented and polished with a prefabricated concrete cove base of the same material, or
- covered with a mineral fiber reinforced vinyl tile 3 mm. thick with a 10 cm. cove base of the same material

5.2.2 WALLS

Masonry plaster painted with a durable washable paint.

5.2.3 CEILINGS

Fire-retardant acoustical tile mounted or suspended in an inverted T metal grid system.

5.2.4 DOORS

Doors shall have their main portions constructed of painted hollow metal with flush faces and edges, mortised hinges, and profiled steel door frames. The storage room should have a full panel door and the dispensing area a combination entry/dispensing type or full panel door depending on how supplies will be dispensed. Openings shall have dimensions adequate for the movement of supplies, medical equipment, dispensing and storage equipment, and personnel. Finish hardware

should include heavy-duty padlocks and hasps on the vestibule/dispensary and dispensary/storage room sides of the doors and a heavy steel bar and latch assembly on the dispensing side of the upper door in the combination entry/dispensing door for after hours security. A combination entry/ dispensing door should also have an integral keyed lock (vestibule side) and thumb latch (dispensing side) in the lower portion of the door, for security reasons during operation hours. Door frames should be of profiled steel plate with welded corners and the necessary anchors to mount them securely to the walls.

5.2.5 WINDOWS

The use of windows is emphatically discouraged, especially exterior windows, because of pest, humidity, light, and heat considerations. They should be provided only at interior locations, when required, to attend medical personnel or patients, to receive requisitions and prescriptions, and to deliver sup plies. These interior windows shall be nonoperable, have metal frames, and be appropriately protected for security after hours.

5.3 ATMOSPHERE

Temperature design is dictated by the label requirements of the supplies present. Many pharmaceutical and some surgical supplies require tempera tures that do not exceed 30°C.

5.3.1 HUMIDITY

Humidity is not controlled in naturally or mechanically ventilated areas. Relative humidity in areas that are air-conditioned to control the tempera ture will be 50 to 55 percent, although no precise level of control is required.

5.4 EQUIPMENT

As required to meet operational requirements and constructed of metal, plastic, and other materials that are generally noncombustible, that do not attract pests, and that have smooth surfaces that make housekeeping easy.

5.5 FURNITURE

As required to meet operational requirements and constructed of metal, plastic, and other materials that are generally noncombustible, that do not attract pests, and have smooth surfaces that require only a minimum of maintenance to remain attractive.

5.6 ILLUMINATION

All fixtures shall be located over the aisles in the storage room and in the shelving area of the dis pensary and be appropriately placed for uniform shadowless lighting in other areas. Intensity levels of 150 lux at the floor level is required in the storage area and at least 250 lux in the dispensing room. Recessed or surface mounted fluorescent fixtures are preferred for all areas.

5.7 AUXILIARY SERVICES

Electrical power, water, a sink, and a floor drain are required. Housekeeping equipment materials

shall be stored with those of the health center outside of the medical supply dispensing and storage areas. At least one portable wall mounted type ABC fire extinguisher of an appropriate rating is required in the dispensing area. See Reference Drawings IDR-2, IDR-4, and IDR-5 for additional information.

6

DESIGN AND CONSTRUCTION

This section will help you:

- identify the generally desirable design and construction considerations for buildings that will have medical supplies distribution and storage areas, in addition to other medical service and/or food storage areas
- identify architectural features that should be incorporated into the design and construction of the medical supply dispensing and storage areas of the health center building

The previous Chapter 2 discusses the importance when designing a building of also planning for future expansion and determining land area requirements, as well as some of the factors that should be evaluated when selecting a specific location and piece of property for a medical supply dispensing facility. This chapter discusses improvement of the property and desirable building design and construction features.

6.1 GRADING AND LANDSCAPING

Final grading should direct surface water away from the constructed area. The property should be landscaped to control dust and to provide shade as discussed elsewhere in the guidelines. The selection of plants and shrubbery should be such that requirements for their maintenance, including watering and trimming, are minimal.

6.2 ACCESS WAYS

Streets, roads, parking lots, and sidewalks near and on the property should also be properly graded to drain storm water and should have paved or gravel surfaces to control dust.

6.3 PERIMETER FENCING

Fencing should be installed as required for security reasons.

6.4 EXTERIOR LIGHTING

Exterior lighting should be installed as required for operational and security reasons.

6.5 ELECTRICAL POWER

Power at the voltage required should be provided by the utility company to a fused disconnect switch located in the dispensing room in compliance with local code requirements. Power should be supplied directly to the disconnect switch in the dispensing room, rather than indirectly through a main panel elsewhere in the health center, to eliminate the possibility of personnel in other areas of the health center inadvertently turning off the power supply to the dispensing areas critical refrigeration and air-conditioning equipment.

6.6 TELEPHONE SERVICE

Service shall be furnished as required.

6.7 WATER

Potable water shall be furnished by the health center's system to the dispensary.

6.8 SANITARY SEWER SERVICES

The dispensary's floor drain and sink drain should be connected to the health center's sanitary waste disposal system. The drains shall be trapped. See Reference Drawing IDR-5 for additional information.

6.9 PEST CONTROL

Design and construct a tightly sealed building with insect screens on all openings, foundation perimeter wall pest barriers (see detail on Reference Drawing IDR-4), and masonry and other construction materials that do not attract or harbor pests.

6.10 STRUCTURAL ALTERNATIVES

Cast-in-place reinforced concrete structural ele ments and ground structure, or prefabricated, precast, pre-stressed, reinforced concrete structural elements mounted on a cast-in-place reinforced concrete ground structure. All structural elements must be designed for live, dead, wind, and seismic loads.

6.11 ARCHITECTURAL

The building should be located on the property to take advantage of natural shading from the sun whenever possible, particularly that portion of the building that contains the medical supplies. In doing so, security should not be compromised.

The building should be designed with an overhang that will provide partial shade to the walls.

6.11.1 FLOORS

In accordance with the criteria in Chapter 5 and with a polyethylene film vapor barrier between the floor slab and the earth or compacted fill.

6.11.2 EXTERIOR WALLS

To provide good storage conditions and to conserve energy in warm climates, the wall systems should be insu lated (U factor of 0.12 or better) masonry sandwich type walls (see Reference Drawing IDR-4) or block masonry walls with the cavities filled with a granular type insulating material. Wall system selection should be in accordance with the local environmental conditions. All wall systems shall be designed and constructed to prevent wind driven rain and pests, such as rodents, bats, birds, and insects from entering the building through system joints, seams, edges, etc., and at intersections with the floor and roof and to be energy efficient.

6.11.3 INTERIOR WALLS

In accordance with the criteria in Chapter 5.

6.11.4 ROOFING

The relatively substantial tropical solar loads, high temperatures, and potentially heavy levels of precipitation in the Central American countries present conditions that subject the roofing system to constant expansion and contraction. Selection of an appropriate roof structure, thermal insulation material (if not provided on the underside of the roof), weatherproofing membrane material, solar barrier, joints, and flashing is, therefore, of the utmost importance, because they must be designed and constructed to work together as a system. For any system selected, the roof's "U" factor for heat transfer should be better than 0.12 to conserve energy.

Water ponding on roofs is one of the main causes of roof failure, particularly when the water collects at flashings such as at roof penetrations, interior roof drains, curbs, and walls. For this reason a structural roofing system that is pitched should be selected. The roof should be uniformly pitched at approximately a 1 percent grade from the center to the ends of the building to provide for a positive flow of water to the perimeter exterior roof drains. A structurally pitched roof is preferred to a fill over a level roof slab because the latter creates an unnecessary dead load for the roof's structural system. Internal roof drain systems should be avoided because they may leak and damage the supplies within the building. Instead, an adequate number of perimeter roof drains are to be installed, set at the proper levels. They should not be installed at building columns, because if a future expansion involves the column on which the roof drains are located, it will be necessary to also rearrange roof drainage.

All roof systems shall be designed and installed to prevent wind-driven rain from entering the building through joints, seams, edges, valleys, etc. The roof system shall also be capable of keeping birds, insects, and other pests from entering.

6.11.5 CEILINGS

In accordance with the criteria in Chapter 5, special attention should be given to the ceiling wall joints in air-conditioned areas. The joints must be tightly sealed for pest control and energy conservation, as well as for maintaining the internal temperature.

Where suspended ceilings are used in buildings in higher seismic risk areas, the structural

engineer should provide direction on hanging and bracing the suspended ceiling's components. The design of the ceiling must be closely coordinated with all other items that will penetrate it and/or that it must sup port such as light fixtures.

6.11.6 DOORS, WINDOWS, AND HARDWARE

In accordance with the criteria in Chapter 5.

6.12 PLUMBING AND DRAIN SYSTEMS

Installations and materials shall conform to local code. Drains shall be trapped. Details on the sink and floor drain installations are provided in Reference Drawing IDR-5.

6.13 ELECTRICAL SYSTEMS

Installation and materials shall conform to local code. The design of the electrical system should include provisions for future expansion. See Reference Drawing IDR-6 for additional information.

6.14 AIR-CONDITIONING EQUIPMENT FOR ENVIRONMENTAL CONTROL

Interior design conditions generally should be 20° C to 30° C and 50 percent relative humidity = 5 per cent. Outside design conditions for the cooling load should be based on local 50 year meteorological data, where available. Applications should use the data for the period in which not more than 2x percent of the hours have temperatures exceeding the values.

Building heat gain shall be determined by:

- sensible heat gain (sun load, transmission load, internal load) and latent heat gain (internal moisture-producing installations and personnel) as recommended in the technical literature with consideration given to diversification, duration, and pyramiding of peaks in the final determination of the total heat gain. Ratings for heat-generating equipment should be obtained from the manufacturer.
- ventilation heat gain on the basis of the volume of fresh air supply or leakage (viz., the open top of the combination entry/dispensing door).

The air-conditioner shall be located so that its intake and discharge of air is unobstructed.

Direct expansion unit air-conditioners of the appropriate capacities based on local environmental conditions with steel mounting brackets and interior mounting frames shall be furnished and installed where necessary. The air-conditioners should be securely mounted through the wall with minimum exposure on the interior surface near the ceiling and should be properly pitched to the exterior in accordance with the manufacturer's printed instructions to assure proper drainage of condensate. Joints between the air-conditioner's components and the wall shall be tightly sealed for pest control and energy conservation, as well as for maintaining the internal tempera ture. Elevated electrical power receptacles should be located near the air-conditioners to minimize electrical cord lengths.

6.14.1 MAINTENANCE OF ENVIRONMENTAL CONTROL SYSTEMS

Even though environmental control equipment is correctly designed, selected, and installed, it cannot operate efficiently or effectively unless it is properly maintained. It is essential that the health care personnel in all local distribution facilities in Central America with unit air-conditioners receive the maintenance resources required for this air-conditioning equipment. Indeed, it is a case of mechanical life or death! The following items must be provided by the Ministry to help assure proper operation and maintenance of environmental control equipment:

- a budget adequate for both formal preventive and demand maintenance programs that includes resources for personnel, spare parts and supplies, transportation, and training of maintenance personnel
- a maintenance record system that provides for the scheduling and verification of preventive maintenance and the maintenance history of each air-conditioning unit
- maintenance instructions, schematic diagrams, and spare parts lists for each model of air-conditioner installed
- an inventory of spare parts, filters, refrigerants, and lubricants
- tools for adjustment and maintenance of the equipment
- training of maintenance personnel, and
- a copy of written operating instructions including operating limits and simple minor maintenance instructions installed adjacent to the equipment.

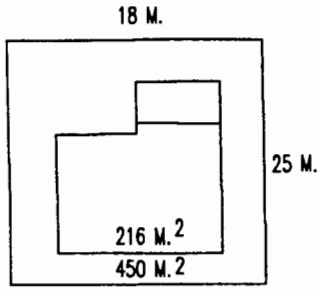

LAND AREA

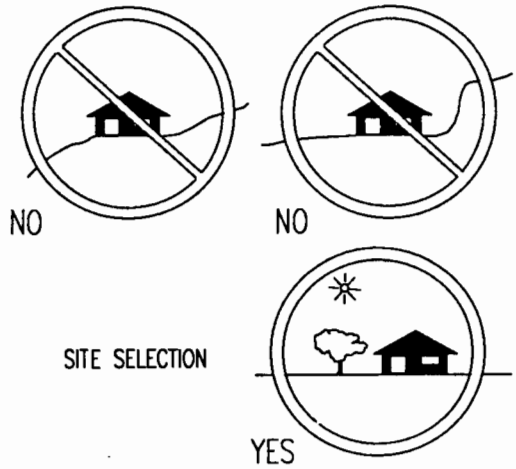

SITE SELECTION

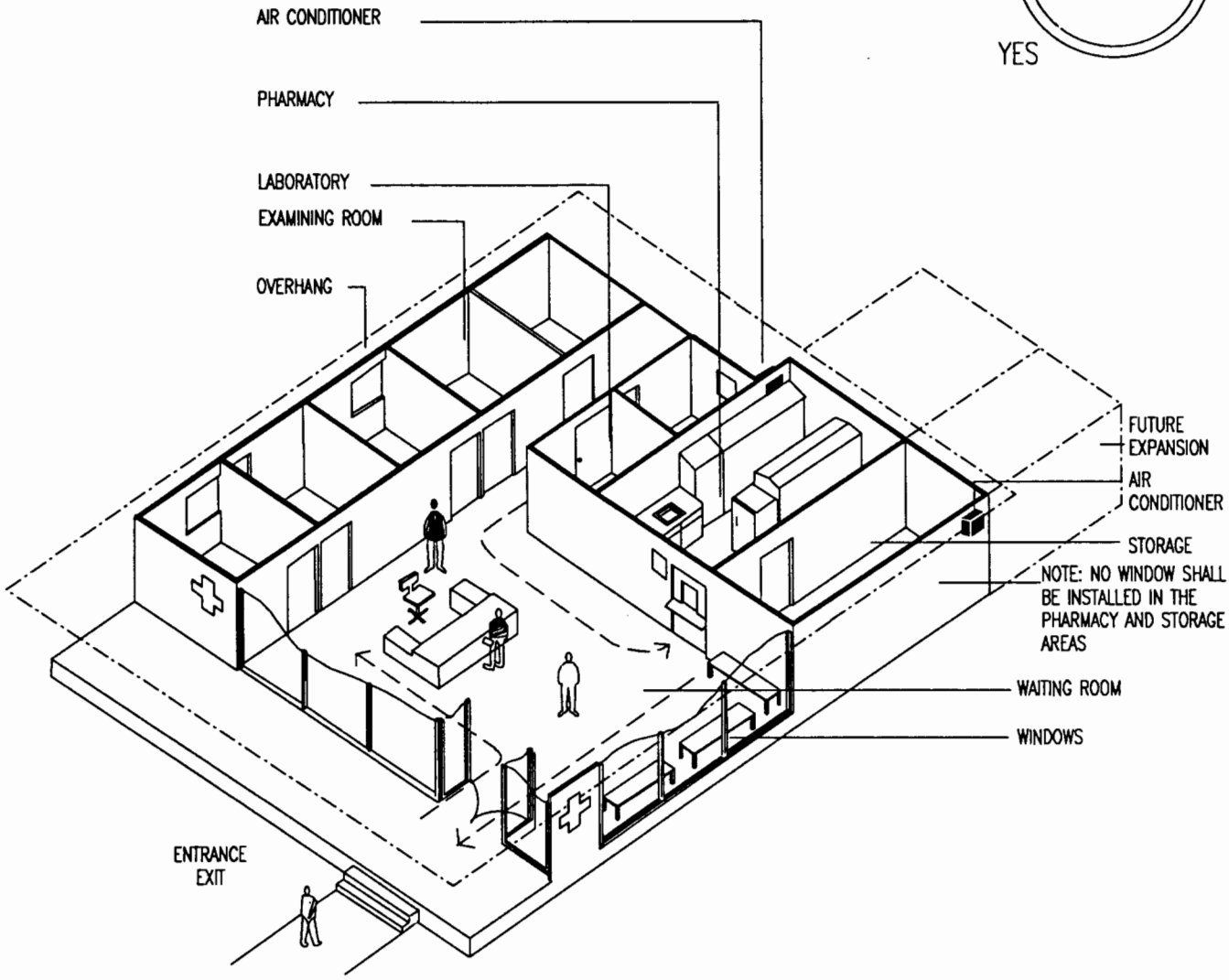

NOTE:
THIS REFERENCE DRAWING IS GENERIC IN NATURE AND IS INTENDED TO CONVEY CONCEPTS. IT DESCRIBES TYPICAL ARRANGEMENTS AND DETAILS DESIRABLE FOR THESE TYPES OF FACILITIES. THE RESPONSIBLE PROJECT ARCHITECT/ENGINEER SHALL ESTABLISH ALL DIMENSIONS AND CONDITIONS. THIS DRAWING IS NOT TO BE USED FOR CONSTRUCTION.

TYPICAL LOCAL DISTRIBUTION CENTER LAYOUT

DR-1

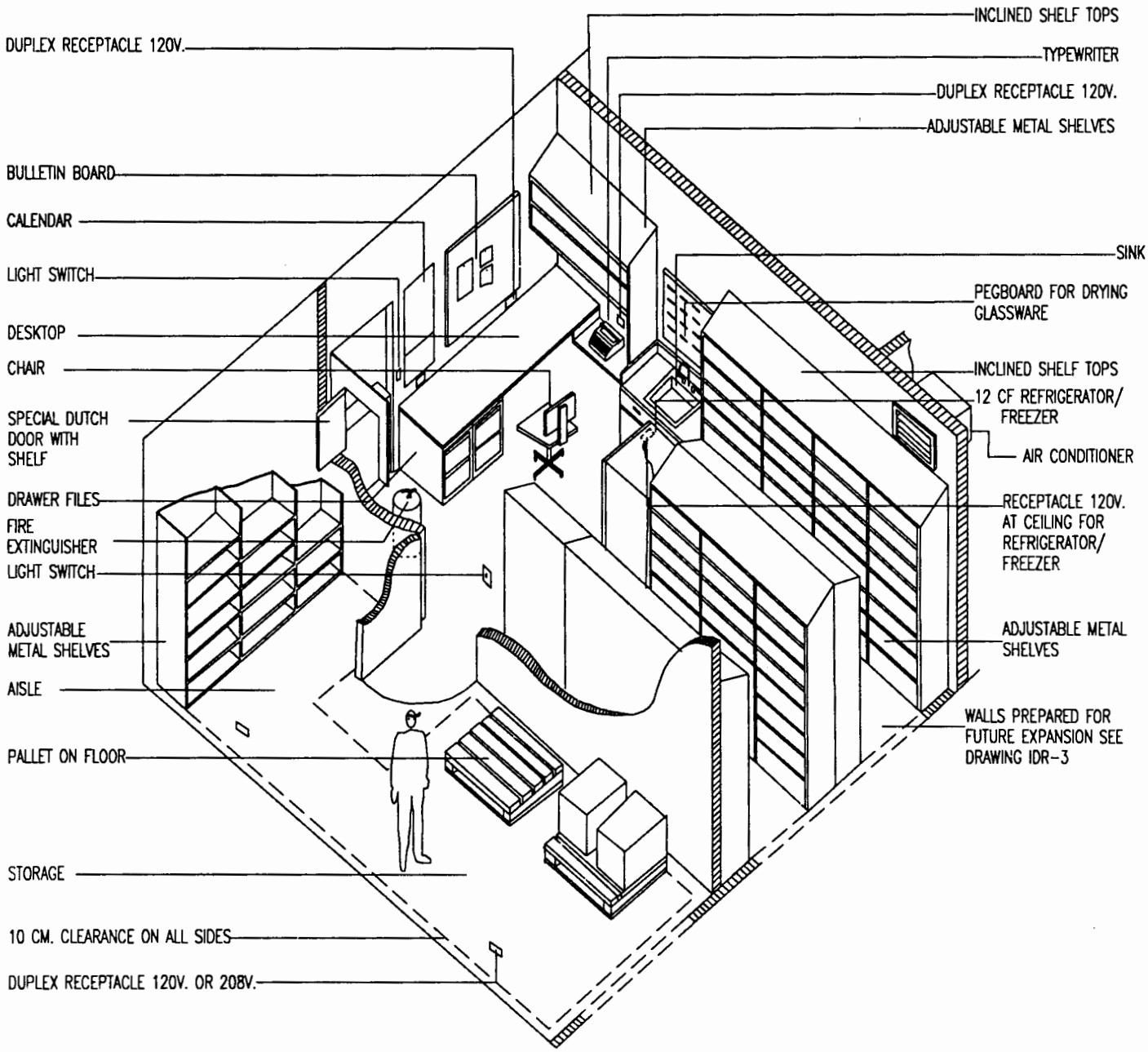

NOTE:
THIS REFERENCE DRAWING IS GENERIC IN NATURE AND IS INTENDED TO CONVEY CONCEPTS. IT DESCRIBES TYPICAL ARRANGEMENTS AND DETAILS DESIRABLE FOR THESE TYPES OF FACILITIES. THE RESPONSIBLE PROJECT ARCHITECT/ENGINEER SHALL ESTABLISH ALL DIMENSIONS AND CONDITIONS. THIS DRAWING IS NOT TO BE USED FOR CONSTRUCTION.

TIPICAL PHARMACY STORAGE LAYOUT

IDR-2

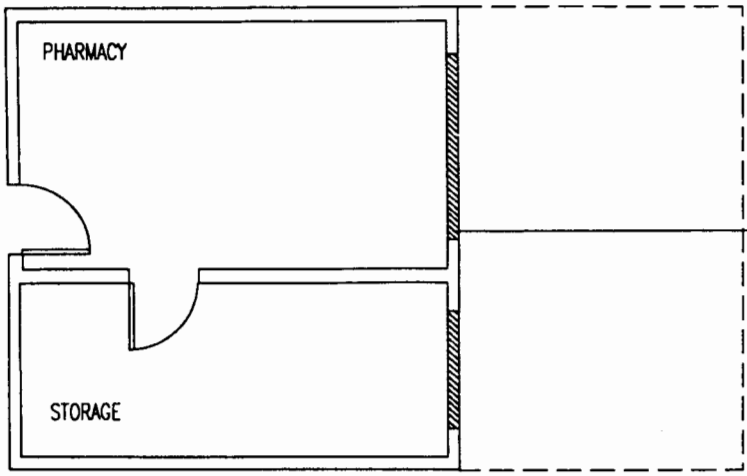

1 PREPARE FOR EASY FUTURE EXPANSION

2 CONSTRUCT REAR WALL WITH KNOCK OUT PANELS THAT ARE INDEPENDENT OF BUT CONNECTED TO THE WALLS WITH STEEL TIES

¡EXPANSION MAY SOON BE NECESSARY !...

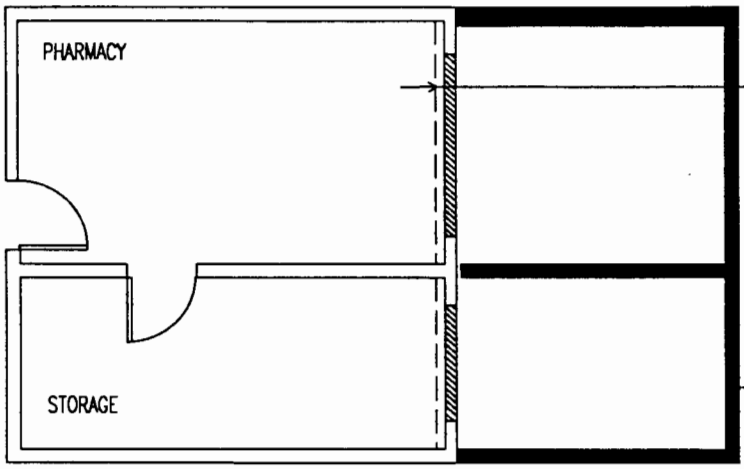

3 REMOVE SHELVES COVER REAR WALLS WITH PLASTIC FILM TIGHTLY SEALED TO PREVENT DUST ENTERING

4 CONSTRUCT THE NEW AREA

DO IT WITHOUT INTERRUPTING SERVICE OR CREATING UNSANITARY CONDITIONS....

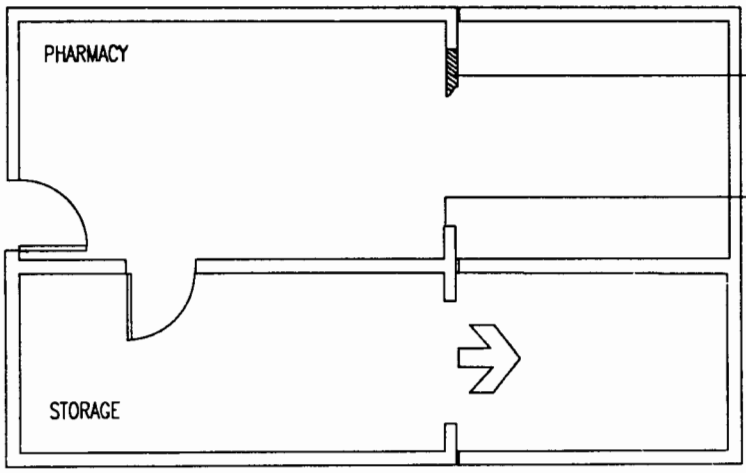

5 DEMOLISH THESE KNOCK OUT PANELS

6 FINISH THE OPENING AND FLOOR JOINT

7 REMOVE THE PLASTIC FILM, INSTALL SHELVING AND OCCUPY THE EXPANDED AREA

NOTE:
THIS REFERENCE DRAWING IS GENERIC IN NATURE AND IS INTENDED TO CONVEY CONCEPTS. IT DESCRIBES TYPICAL ARRANGEMENTS AND DETAILS DESIRABLE FOR THESE TYPES OF FACILITIES. THE RESPONSIBLE PROJECT ARCHITECT/ENGINEER SHALL ESTABLISH ALL DIMENSIONS AND CONDITIONS. THIS DRAWING IS NOT TO BE USED FOR CONSTRUCTION.

FUTURE EXPANSION

IDR-3

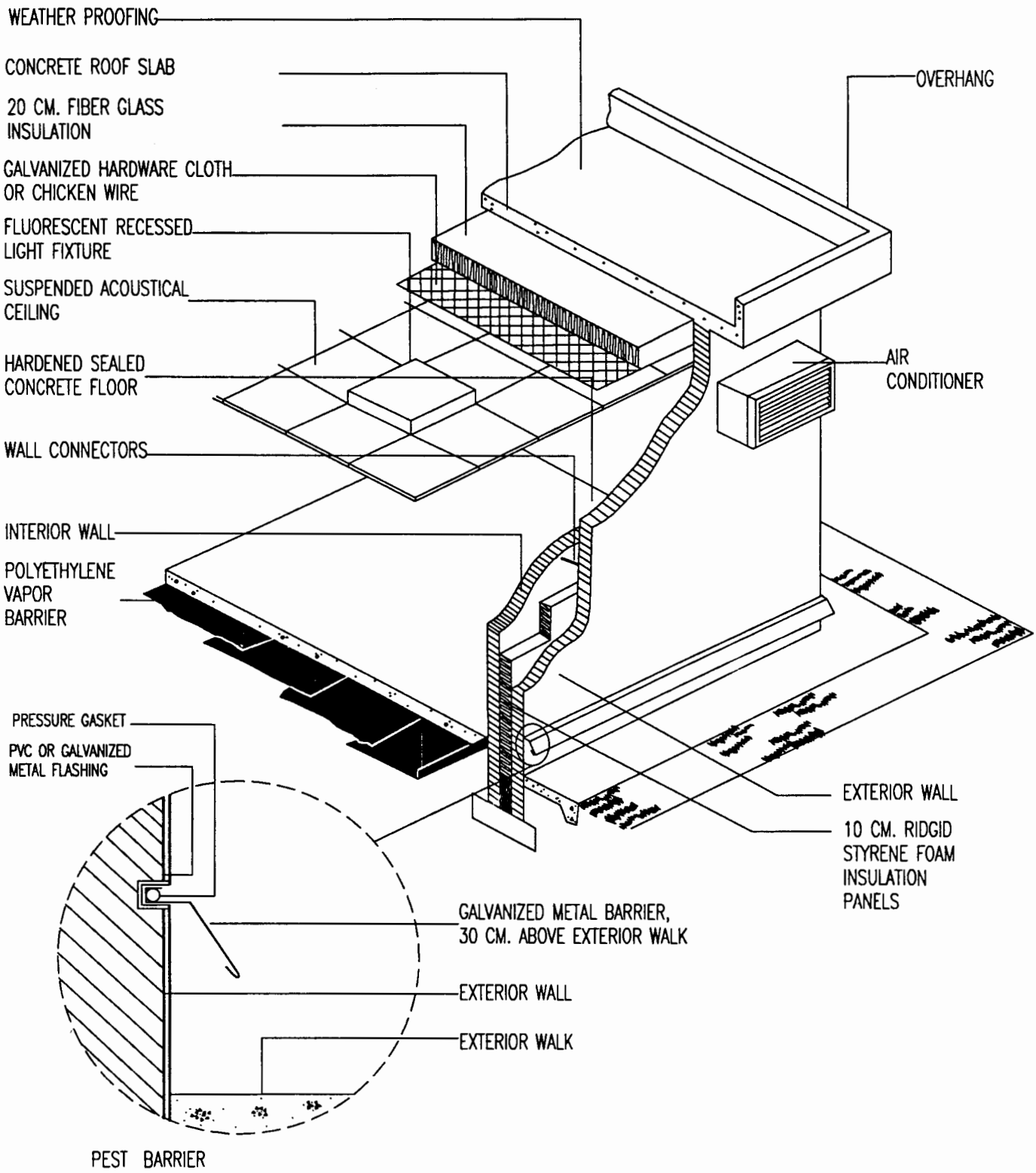

NOTE:
THIS REFERENCE DRAWING IS GENERIC IN NATURE AND IS INTENDED TO CONVEY CONCEPTS. IT DESCRIBES TYPICAL ARRANGEMENTS AND DETAILS DESIRABLE FOR THESE TYPES OF FACILITIES. THE RESPONSIBLE PROJECT ARCHITECT/ENGINEER SHALL ESTABLISH ALL DIMENSIONS AND CONDITIONS. THIS DRAWING IS NOT TO BE USED FOR CONSTRUCTION.

TIPICAL CONSTRUCTION DETAILS

IDR-4

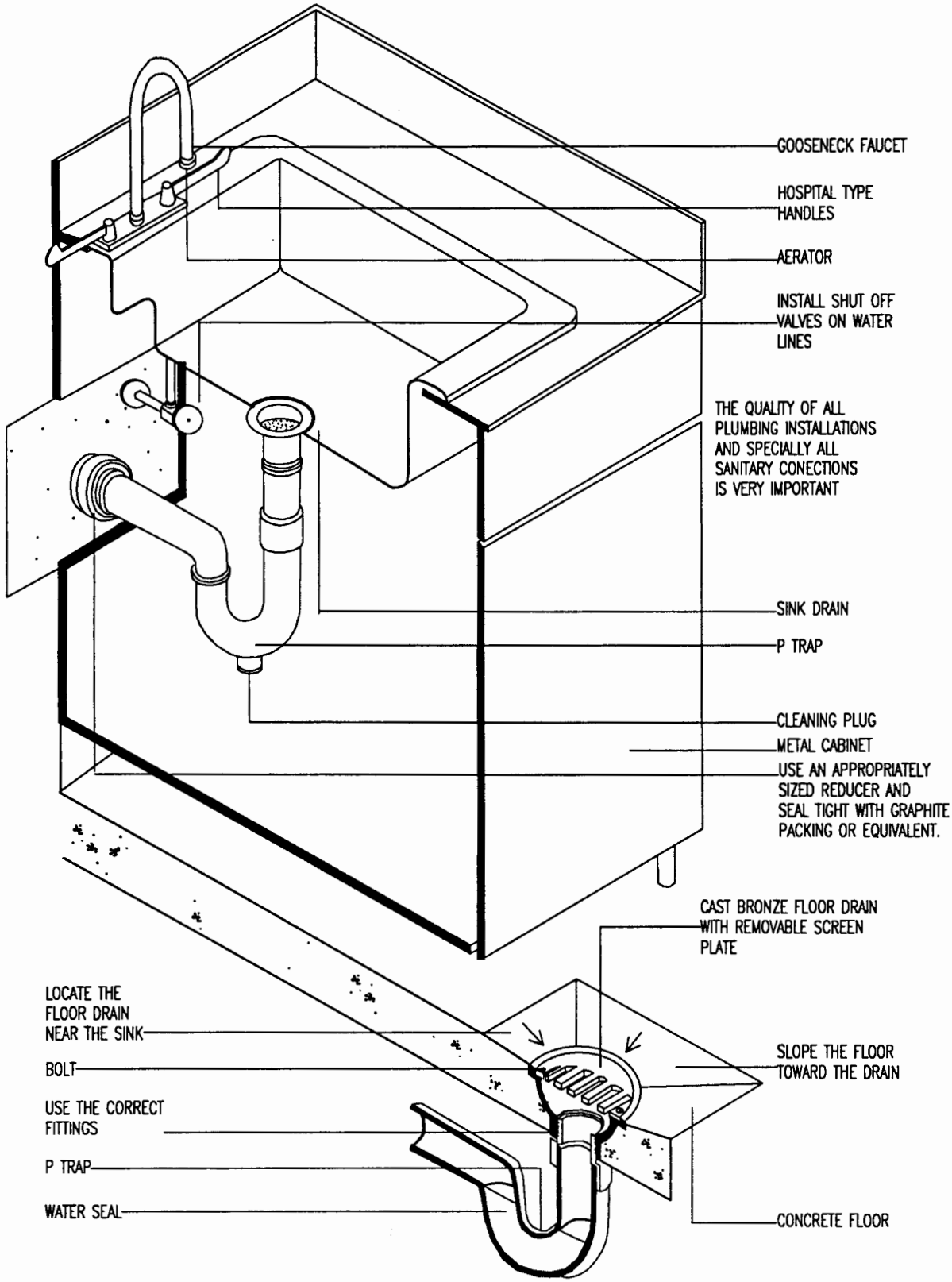

NOTE:
THIS REFERENCE DRAWING IS GENERIC IN NATURE AND IS INTENDED TO CONVEY CONCEPTS. IT DESCRIBES TYPICAL ARRANGEMENTS AND DETAILS DESIRABLE FOR THESE TYPES OF FACILITIES. THE RESPONSIBLE PROJECT ARCHITECT/ENGINEER SHALL ESTABLISH ALL DIMENSIONS AND CONDITIONS. THIS DRAWING IS NOT TO BE USED FOR CONSTRUCTION.

PLUMBING DETAILS

IDR-5

A GOOD ELECTRICAL INSTALLATION GUARANTEES SAFETY AS WELL AS PERFORMANCE:

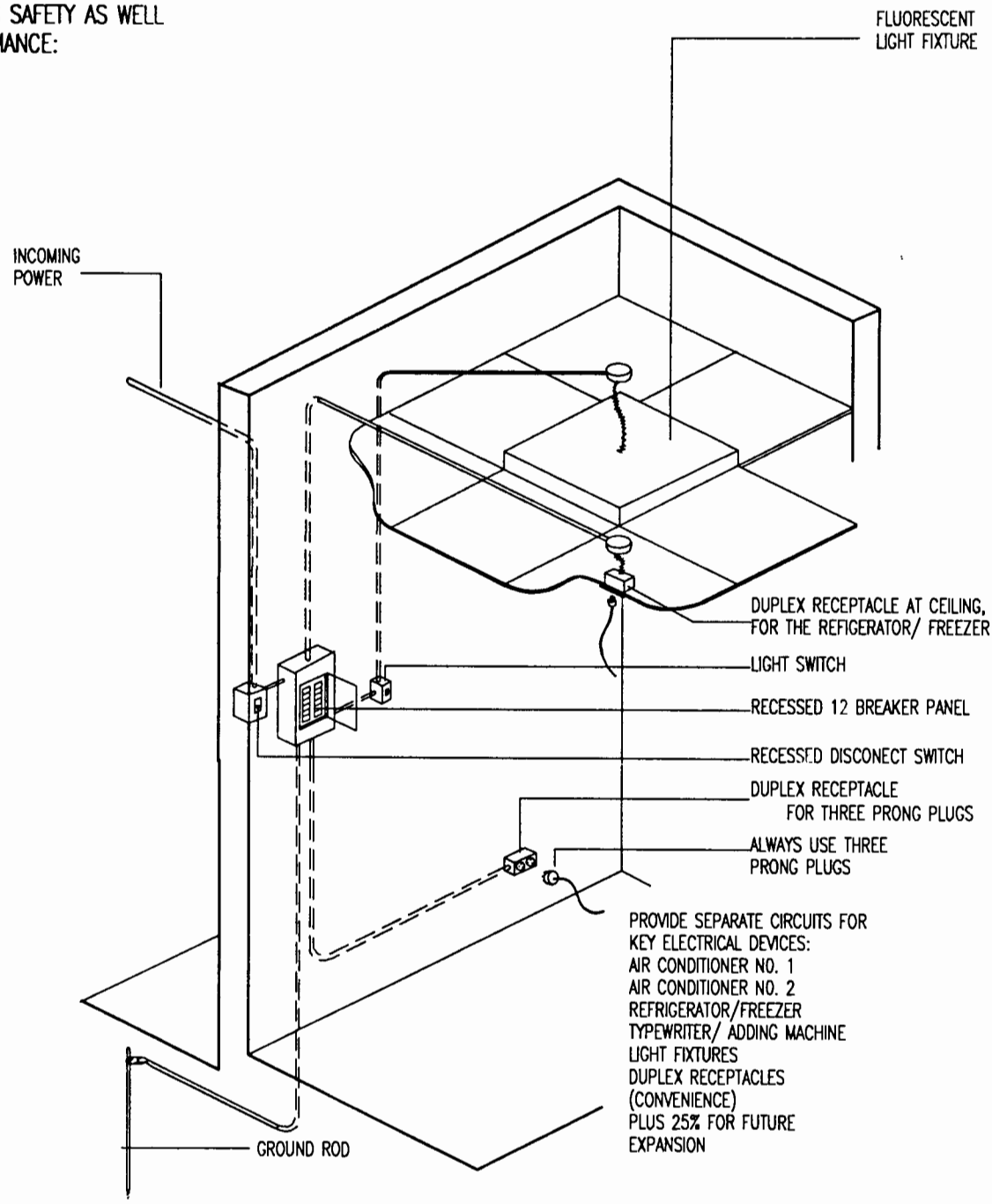

NOTE:
THIS REFERENCE DRAWING IS GENERIC IN NATURE AND IS INTENDED TO CONVEY CONCEPTS. IT DESCRIBES TYPICAL ARRANGEMENTS AND DETAILS DESIRABLE FOR THESE TYPES OF FACILITIES. THE RESPONSIBLE PROJECT ARCHITECT/ENGINEER SHALL ESTABLISH ALL DIMENSIONS AND CONDITIONS. THIS DRAWING IS NOT TO BE USED FOR CONSTRUCTION.

ELECTRICAL DETAILS

IDR-6

Este libro se terminó de imprimir
el 5 de septiembre de 1989, en
los talleres del Centro Impresor
Piedra Santa.
Guatemala, C.A.